ATTACHMENT NO. 7

City of Fontana

8437 Sierra Avenue
Fontana, CA 92335

Action Report

Planning Commission

File #: 26-0868
Agenda #: PH-A

Agenda Date: 3/17/2026
Category: Public Hearing

FROM:
Planning Department

TITLE:
Master Case No. (MCN) 18-000053: Tentative Parcel Map No. 18-000005 (TPM No. 19950) and Design Review No. 18-000010 - A request to split one (1) parcel into two (2) and for site and architectural approval for the development of two (2) new industrial commerce center buildings, Building No. 1 will have 41,218 square feet and Building No. 2 will have 30,767 square feet, and with associated site improvements, on 3.98 acres, located north of Hilton Drive and west of Hemlock Avenue (APN: 1110-151-03), pursuant to a categorical exemption in accordance with CEQA Guidelines Section 15332.

RECOMMENDATION:
Based on the information contained in the staff report and subject to the attached Findings and Conditions of Approval, staff recommends that the Planning Commission adopt Resolution No. PC 2026 -___, and

1. Determine that the project is categorically exempt pursuant to Section No. 15332 (Class No. 32, Infill Development) of the California Environmental Quality Act, and Section No. 3.22 (Categorical Exemption) of the Local 2019 Guidelines for Implementing the CEQA, and direct staff to file a Notice of Exemption; and

2. Approve Tentative Parcel Map No. 18-000005 (TPM No. 19950); and

3. Approve Design Review (DR) No.18-000010

APPLICANT:
C. VanDerHoek Architects, Inc.
4109 E. Fernwood Avenue
Orange, CA 92869

LOCATION:
The project site is located north of Hilton Drive and west of Hemlock Avenue, (APN: 1110-151-03)

REQUEST:
Tentative Parcel Map No. 18-000005 (TPM No. 19950) - A request to divide one (1) parcel into two (2) parcels. Parcel No. 1 will be approximately 2.29 acres and Parcel No. 2 will be approximately 1.69 acres, with a total of approximately 3.98 adjusted acres.

Design Review (DRP) No. 18-000010; A request for site and architectural approval for two (2) new

industrial commerce center buildings, Building No. 1 will be 41,218 square feet including 4,668 square feet office space and Building No. 2 will be 30,767 square feet including 4,668 square feet of office space, and associated site improvements on approximately 3.98 acres.

PROJECT PLANNER:
Salvador Quintanilla, Senior Planner

BACKGROUND INFORMATION:
The Project was previously scheduled for Planning Commission consideration on June 4, 2019. At that time, staff presented a memo to the Planning Commission requestion that the project be continued off calendar so that staff could adequately respond to a general comment letter submitted by Supporters Alliance for Environmental Responsibility objecting to the Categorical Exemption determination under CEQA Guideline Section 15332. The Applicant has submitted a justification memo with technical studies to support the Categorical Exemptions under CEQA Guidelines Section 15332. Staff has reviewed and concurs with the analysis in the justification memo.

Land Use Table

	General Plan	Zoning/Overlay	Existing Land Use
Site:	Light Industrial (I-L)	West End Specific Plan (SP)- BP-3 District.	Vacant
North:	Light Industrial (I-L)	West End Specific Plan (SP) BP-3 District	Warehouse use
South:	Light Industrial (I-L)	West End Specific Plan (SP) -BP-3 District	Warehouse use/Business Park
East:	Light Industrial (I-L)	West End Specific Plan (SP)- BP-3 District	Warehouse use/Business Park
West:	Light Industrial (I-L)	West End Specific Plan (SP)- BP-3 District	Industrial use

PROJECT DESCRIPTION:

Building#	Square Foot	Parcel Size	Parking	Height	Landscaping
1	Total Building: 41,218 sq.ft. Office: 4,668 sq.ft. Warehouse: 36,550 sq.ft.	2.29 acres 99,887 sq.ft.	Required: 55.2 Provided: 56	47’5”	Req: 15% 9,163 sq.ft. Provided: 22%, 12,614 sq.ft.

2	Total Building: 30,767 sq.ft. Office: 4,668 sq.ft. Warehouse: 26,099 sq.ft.	1.69 acres 73,638 sq.ft.	Required: 44.8 Provided: 48	47’5”	Req: 15% 6,793 sq.ft. Provided: 18% 7,343 sq.ft.

ANALYSIS:

The applicant, Hilton Lane, LLC. is requesting that the Planning Commission approve Tentative Parcel Map No. 18-000005 (TPM No. 19950) to subdivide one parcel into two parcels and Design Review No. 18-000010, for development of two new industrial commerce center buildings, and associated site improvements on approximately 3.98 total acres.

Tentative Parcel Map No. 18-000005 (TPM No. 19950)

Tentative Parcel Map No. 18-000005 (TPM No. 19950) subdivides one parcel (APN: 1110-151-03) into two parcels. Parcel No. 1 will have approximately 2.29 acres and Parcel No. 2 will have approximately 1.69 acres, with a total of approximately 3.98 adjusted acres. The resulting parcels will meet the development standards of the Zoning and Development Code and West End Specific Plan and will enable the development of the industrial commerce center facilities.

Design Review (DR) No. 18-000010

The development seeks site and architectural approval of two (2) new industrial commerce center buildings on two (2) parcels, Building No.1 will be 41,218 square feet including 4,668 square feet of office space and Building No. 2 will have 30,767 square feet including 4,668 square feet of office space, totaling approximately 71,985 square feet.

Both buildings are designed with similar architectural features. The architectural features of the industrial commerce center buildings will include an exterior white and grey tone color palette with black accents. The architectural style includes metal doors, glazed aluminum storefront windows, and exterior lighting.

The variations to the buildings’ faces, varying roof lines will make the Project architecturally pleasing and consistent with the surrounding area. The Project includes associated on and off -site improvements including parking spaces, new landscaping, enhanced lighting, curb, gutter, sidewalks, and utilities related to the Project.

The proposal has been designed to be compatible with surrounding industrial uses. The Project Site is physically suitable in size and shape to support the development of the proposed industrial commerce center buildings. Applicable building codes, zoning codes, Specific plan requirements, and fire codes and standards will be met and make for a safe, attractive, and well-designed project. The Project incorporates safety measures for automobiles and pedestrians in the area.

Grading/Walls:

The project site is relatively flat and currently vacant. The existing drainage pattern flows from the northeast to the southwest. An underground water chamber system will be constructed for the Project.

The project plans include a six-foot high tubular steel fence along the north, east, and west sides of the property. The Project Site will have a six-foot high swing gate located at the west side of Project Site. Additionally, the applicant is proposing to construct an eight-foot-high retaining wall at the rear of the property to level the project site.

Site Access/Circulation/Parking:
Primary vehicle access to the Project Site is provided from Hilton Drive with two driveways, one on the east end of the property and one on the west end. The internal circulation has been reviewed by the Planning, Fire, Traffic, and Engineering Departments and found to be sufficient to support this type of use.

Environmental:
The project environmental consultant (Lilburn Corporation) prepared a CEQA Categorical Exemption Justification Memo and supporting technical studies, (see link below) to support the Project Categorical Exemption from CEQA.
Environmental Documents | Fontana, CA - Official Website
<https://www.fontanaca.gov/2137/Environmental-Documents>.

Therefore, pursuant to the California Environmental Quality Act (CEQA) Guidelines and Section No. 3.22 (Categorical Exemption) of the City of Fontana's 2019 Local Guidelines for Implementing CEQA, the proposed Project is categorically exempt from CEQA pursuant to CEQA Guidelines Section No. 15332 as a Class 32, Infill Development Project. The project site is considered Infill Development and meets the CEQA requirements of Infill: (1) The Project is consistent with the Light Industrial (I-L) designation of the General Plan and the West End Specific Plan/BP-3 District regulations; (2) The Project Site is less than five (5) acres (3.98 acres); (3) The Project Site is not within any known sensitive or threatened habitat area; (4) The Project will not have any significant effects related to traffic, noise, air quality, or water quality; and (5) There are adequate public services for the development of the proposed industrial project. Further, none of the exceptions in CEQA Guidelines section 15300.2 apply to the Project.

MOTION:
Approve staff's recommendation.

ATTACHMENTS:
Attachment No. 1 - Vicinity Map
Attachment No. 2 - Project Plan Set
Attachment No. 3 - Planning Commission Resolution, Findings & Conditions of Approval
Attachment No. 4 - Notice of Exemption
Attachment No. 5 - Public Hearing Notice

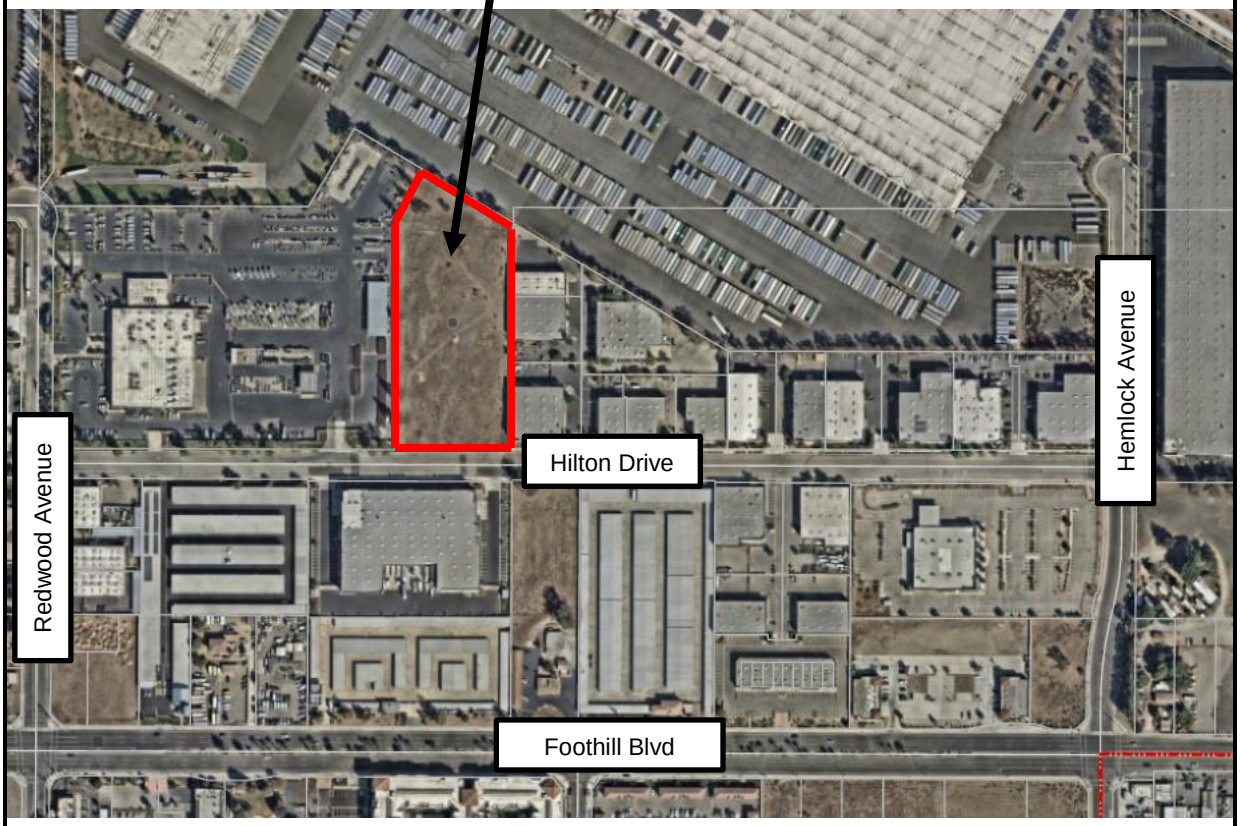

N

CITY OF FONTANA PLANNING DEPARTMENT

VICINITY MAP

DATE: March 17, 2026

CASE: Master Case No. 18-000053
Tentative Parcel Map No. 18-000005
(TPM No. 19950)
Design Review No. 18-000010

ATTACHMENT NO. 1

ATTACHMENT NO. 2

SITE SUMMARY BUILDING-1:

Land Use:	Light Industrial	Sprinklers:	Yes
Zoning:	West End Specific Plan (BP3)	Const. Type:	III-B
		APN:	1110-151-03-0-000
Occupancies:	B/ S-1		

	Provided	Req/Allow.	Prov.
Ground floor area	38,798	0.00	0.39
Total building area	41,218	0.60	0.41 FAR
Landscape area	12,614	0.15	0.22
Parking area	57,106		
Loading areas	3,983		
All other paved areas	44,492		
Site Area	99,887	2.29 acres	

ALLOWABLE BUILDING HEIGHT:

Occupancy & Const. Type	Stories Allowable	Stories Provided	Height Allowable	Height Provided
B/ F-1/ S-1/ M III-B	4	2	75	47.5'

ALLOWABLE BUILDING AREA:

$| F/P - 0.25 | W/30 = I_f$

F=Frontage, P=Building perimeter, W=width of open space 20 to 30

F	P	W	I_f
868	868	0	0.00%

Single Occupancy, Multiple Story (Eq 5-2) $\{ A_t + [NS \times I_f] \times S_a \} = A_a$

A_t=Tabular area use NS, S13R or SM, NS=Tabular Area no sprinklers I_f=Frontage increase, S_a=Actual Stories, A_a= Allowable area

Mixed Occupancy, Multi Story use 1 for S_a to make (Eq 5-2) = (Eq 5-3). Use NS, S13R or SM for A_t. Sum ratios.

Check Each Floor

Occupancy on Level-2	Const. Type	Actual Area	Table Area (SM) A_t	Table Area NS	Frontage I_f	S_a	Allowable Area A_a	Ratio
B	III-B	2,420	57,000	19,000	0.00%	1	57,000	0.04
F-1	III-B	0	36,000	12,000	0.00%	1	36,000	0.00
S-1	III-B	0	52,500	17,500	0.00%	1	52,500	0.00
Total Level-2		2,420						0.04

Occupancy on Level-1		Actual Area	Table Area (SM) A_t	Table Area NS	Frontage I_f	S_a	Allowable Area A_a	Ratio
B	III-B	2,248	57,000	19,000	0.00%	1	57,000	0.04
F-1	III-B	0	36,000	12,000	0.00%	1	36,000	0.00
S-1	III-B	36,550	52,500	17,500	0.00%	1	52,500	0.70
Total Level-1		38,798						0.74

Check Total Building

Occupancy		Actual Area	Table Area (SM) A_t	Table Area NS	Frontage I_f	S_a	Allowable Area A_a	Ratio
B V-B Multiple Stories	III-B	4,668	57,000	19,000	0.00%	1	57,000	0.08
F-1 V-B	III-B	0	36,000	12,000	0.00%	1	36,000	0.00
S-1 V-B	III-B	36,550	52,500	17,500	0.00%	1	52,500	0.70
Total		41,218						0.78

Parking Space Types	Provided	Required	
Standard 9' x 19'	39	-	
Compact 7' x 16'	1	-	
Accessible	3	3	
EVCS Ready	1	1	
EVCS Ready Accessible	2	2	
EVCS Capable (future)	10	10	
Total Parking Spaces	56	55.2	
Bicycle short term	4	3	Short term CGBSC 5% pkg min 2
Bicycle long term	3	3	Long term CGBSC 5% pkg min 2
Loading Spaces	4	0	

BLDG. AREAS, EGRESS AND PLUMBING OCCUPANT LOADS

501 to 1000=3 exits, x>1001=4 exits

Building-1 Level-2

Floor Spaces	Occupancy	Area	Egress OLF	2 Exits If Over	Egress Occ.	Exits Req.	Plumbing OLF	Plumbing Occ.	Parking Ratio	Parking Req.
Office	B	2,420	150	29	16	1	150	16	250	9.68
Halls Restrm, Elect, Equip	B	0	300	29	0	0	0	0	250	0.00
Total Level-2		2,420			16	1		16		9.68

Building-1 Level-1

Floor Spaces		Area	Egress OLF	2 Exits If Over	Egress Occ.	Exits Req.	Plumbing OLF	Plumbing Occ.	Parking Ratio	Parking Req.	
Office	B	1,647	150	49	11	1	150	11	250	6.59	
Lounge/Waiting	B	446	15	49	30	1	30	15	250	1.78	
Stairs, Halls, Storage	B	155	300	49	1	1	0	0	250	0.62	
Warehouse Storage	S-1	30,940	500	29	62	2	4000	8	1,000	30.94	
Warehouse Distribution	S-1	5,000	150	29	33	2	500	10	1,000	5.00	
Restrooms	S-1	302	300	29	1	1	0	0	1,000	0.30	
Halls, Equip, Voids	S-1	308	300	29	1	1	0	0	1,000	0.31	
Total Ground Floor		38,798			138	2		44		45.54	
Total Building-1		41,218			155	2		60		55.22	56

Exit Width Calculations Each Suite

Ground Level	Occupants	Ratio	Req. Exit Width
Stairs	16	0.30	4.84
Other	138	0.20	27.70

CPC 422.2 if occ less than 50 1 RR ok

*CPC 415.2 if occ less than 30 no DF req

		Plumb	Water Closet		Urinals		Lavatories		Drinking Fountain		Service Sinks	
	Occupancy	Occ	Factor	Required	Factor	Req.	Factor	Req	Factor	*Req	Factor	Req
Men	B	21	50	0.42	100	0.21	75	0.28	150	0.14	1	1.00
Women	B	21	15	1.40	0	0.00	50	0.42				
Men	S-1	4	100	0.04	0	0.00	200	0.02	250	0.02	1	1.00
Women	S-1	4	100	0.04	0	0.00	200	0.02				
Total Required Men				0.46		0.21		0.30		0.16		1.00
Total Required Women				1.44		0.00		0.44				
Total Prov. Men				1		1		1		2		1
Total Prov. Women				2		0		1				

SITE SUMMARY BUILDING-2:

Land Use:	Light Industrial	Sprinklers:	Yes
Zoning:	West End Specific Plan (BP3)	Const. Type:	III-B
		APN:	1110-151-03-0-000
Occupancies:	B/ S-1		

	Provided	Req/Allow.	Prov.
Ground floor area	28,347	0.00	0.38
Total building area	30,767	0.60	0.42 FAR
Landscape area	7,343	0.15	0.18
Parking area	41,386		
Loading areas	3,905		
All other paved areas	34,043		
Site Area	73,638	1.69 acres	

ALLOWABLE BUILDING HEIGHT:

Occupancy & Const. Type	Stories Allowable	Stories Provided	Height Allowable	Height Provided
B/ F-1/ S-1/ M III-B	4	2	75	47.5'

ALLOWABLE BUILDING AREA:

$| F/P - 0.25 | W/30 = I_f$

F=Frontage, P=Building perimeter, W=width of open space 20 to 30

F	P	W	I_f
714	714	0	0.00%

Single Occupancy, Multiple Story (Eq 5-2) $\{ A_t + [NS \times I_f] \times S_a \} = A_a$

A_t=Tabular area use NS, S13R or SM, NS=Tabular Area no sprinklers I_f=Frontage increase, S_a=Actual Stories, A_a= Allowable area

Mixed Occupancy, Multi Story use 1 for S_a to make (Eq 5-2) = (Eq 5-3). Use NS, S13R or SM for A_t. Sum ratios.

Check Each Floor

Occupancy on Level-2	Const. Type	Actual Area	Table Area (SM) A_t	Table Area NS	Frontage I_f	S_a	Allowable Area A_a	Ratio
B	III-B	2,420	57,000	19,000	0.00%	1	57,000	0.04
F-1	III-B	0	36,000	12,000	0.00%	1	36,000	0.00
S-1	III-B	0	52,500	17,500	0.00%	1	52,500	0.00
Total Level-2		2,420						0.04

Occupancy on Level-1		Actual Area	Table Area (SM) A_t	Table Area NS	Frontage I_f	S_a	Allowable Area A_a	Ratio
B	III-B	2,248	57,000	19,000	0.00%	1	57,000	0.04
F-1	III-B	0	36,000	12,000	0.00%	1	36,000	0.00
S-1	III-B	26,099	52,500	17,500	0.00%	1	52,500	0.50
Total Level-1		28,347						0.54

Check Total Building

Occupancy		Actual Area	Table Area (SM) A_t	Table Area NS	Frontage I_f	S_a	Allowable Area A_a	Ratio
B V-B Multiple Stories	III-B	4,668	57,000	19,000	0.00%	1	57,000	0.08
F-1 V-B	III-B	0	36,000	12,000	0.00%	1	36,000	0.00
S-1 V-B	III-B	26,099	52,500	17,500	0.00%	1	52,500	0.50
Total		30,767						0.58

Parking Space Types	Provided	Required	
Standard 9' x 19'	36	-	
Compact 7' x 16'	2	-	
Accessible	2	2	
EVCS Ready	1	1	
EVCS Ready Accessible	1	1	
EVCS Capable (future)	6	6	
Total Parking Spaces	48	44.8	
Bicycle short term	4	3	Short term CGBSC 5% pkg min 2
Bicycle long term	3	3	Long term CGBSC 5% pkg min 2
Loading Spaces	4	0	

BLDG. AREAS, EGRESS AND PLUMBING OCCUPANT LOADS

501 to 1000=3 exits, x>1001=4 exits

Building-2 Level-2

Floor Spaces	Occupancy	Area	Egress OLF	2 Exits If Over	Egress Occ.	Exits Req.	Plumbing OLF	Plumbing Occ.	Parking Ratio	Parking Req.
Office	B	2,420	150	29	16	1	150	16	250	9.68
Halls Restrm, Elect, Equip	B	0	300	29	0	0	0	0	250	0.00
Total Level-2		2,420			16	1		16		9.68

Building-2 Level-1

Floor Spaces		Area	Egress OLF	2 Exits If Over	Egress Occ.	Exits Req.	Plumbing OLF	Plumbing Occ.	Parking Ratio	Parking Req.	
Office	B	1,647	150	49	11	1	150	11	250	6.59	
Lounge/Waiting	B	446	15	49	30	1	30	15	250	1.78	
Stairs, Halls, Storage	B	155	300	49	1	1	0	0	250	0.62	
Warehouse Storage	S-1	20,489	500	29	41	2	4000	5	1,000	20.49	
Warehouse Distribution	S-1	5,000	150	29	33	2	500	10	1,000	5.00	
Restrooms	S-1	302	300	29	1	1	0	0	1,000	0.30	
Halls, Equip, Voids	S-1	308	300	29	1	1	0	0	1,000	0.31	
Total Ground Floor		28,347			118	2		41		35.09	
Total Building-2		30,767			134	2		57		44.77	48

Exit Width Calculations Each Suite

Ground Level	Occupants	Ratio	Req. Exit Width
Stairs	16	0.30	4.84
Other	118	0.20	23.51

CPC 422.2 if occ less than 50 1 RR ok

*CPC 415.2 if occ less than 30 no DF req

		Plumb	Water Closet		Urinals		Lavatories		Drinking Fountain		Service Sinks	
	Occupancy	Occ	Factor	Required	Factor	Req.	Factor	Req	Factor	*Req	Factor	Req
Men	B	21	50	0.42	100	0.21	75	0.28	150	0.14	1	1.00
Women	B	21	15	1.40	0	0.00	50	0.42				
Men	S-1	3	100	0.03	0	0.00	200	0.01	250	0.01	1	1.00
Women	S-1	3	100	0.03	0	0.00	200	0.01				
Total Required Men				0.45		0.21		0.29		0.15		1.00
Total Required Women				1.42		0.00		0.43				
Total Prov. Men				1		1		1		2		1
Total Prov. Women				2		0		1				

HILTON INDUSTRIAL FACILITY

HILTON DRIVE
FONTANA, CA

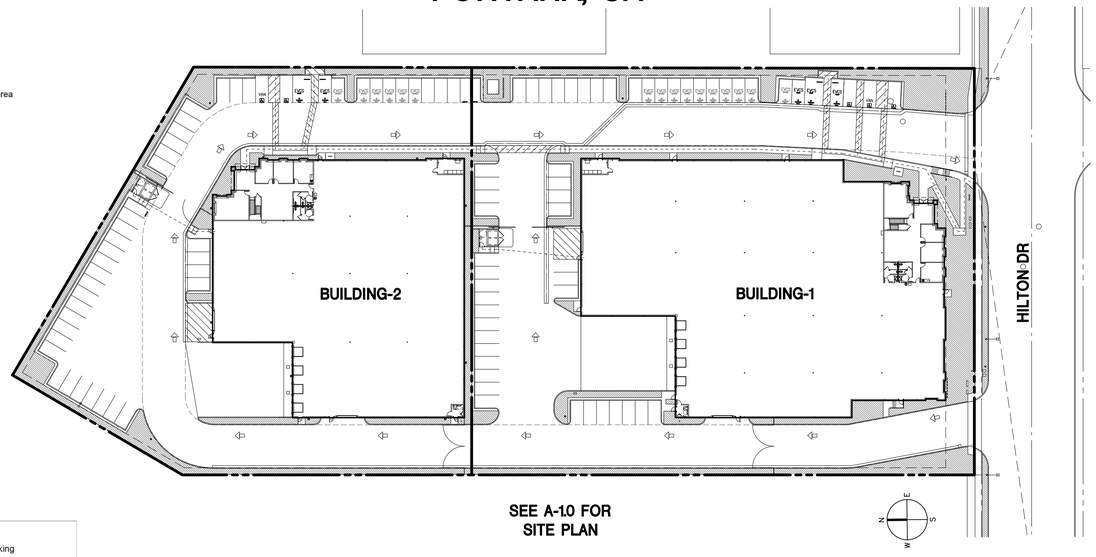

SEE A-1.0 FOR SITE PLAN

C. VANDERHOEK ARCHITECTS
4109 E. Fernwood Ave
Orange, CA 92869
Tel: 714-308-7662

HILTON INDUSTRIAL FACILITY

HILTON DRIVE
FONTANA, CA

MASTER CASE NO. 18-053 TPM NO. 18-005 DESIGN REVIEW NO. 18-010

COVER SHEET

REVISION:

DATE MARCH 17, 2025

JOB NO: 21088
SHEET:

T-1.0

. OF .. SHEETS

© 2025 C. VanDerHoek Architects, Inc. expressly reserves its common law copyright and other property rights in these plans. These plans are not to be reproduced, changed or copied in any form or manner whatsoever, nor are they to be assigned to any third party, without first obtaining the written permission and consent of C. VanDerHoek Architects, Inc.

SITE DATA

SCALE: 1"=50'-0" | 3

APPLICABLE BUILDING CODES

2022 CALIFORNIA BUILDING CODE
2022 CALIFORNIA MECHANICAL CODE
2022 CALIFORNIA PLUMBING CODE
2022 CALIFORNIA ELECTRIC CODE
2022 CALIFORNIA FIRE CODE
2022 CALIFORNIA GREEN BUILDING STANDARDS CODE
2022 CALIFORNIA ENERGY CODE

SCOPE OF WORK:
- 2 NEW BUILDINGS WITH SITE IMPROVEMENTS
- 2 NEW TRASH ENCLOSURES
- FENCES AND GATES

20 | CODES AND SCOPE | SCALE: NONE | 16

OWNER:
HILTON LANE, LLC
P.O. BOX 54403
IRVINE, CA 92619-4998
PHONE: (949) 854-4518
CONTACT: GEORGE MCCAN

ARCHITECT:
C. VANDERHOEK ARCHITECTS, INC.
4109 E. FERNWOOD AVE
ORANGE, CA 92869
PHONE: (714) 308-7662
CONTACT: CARL VANDERHOEK, R.A.

CIVIL:
LAND DEVELOPMENT DESIGN CO., LLC
2313 E. PHILADELPHIA ST, SUITE F
ONTARIO, CA 91761
CONTACT: KEVIN RICHER
PHONE: (909) 430-1466

GEOTECHNICAL ENGINEER:
NORCAL ENGINEERING
10641 HUMBOLT STREET
LOS ALAMITOS, CA 90720
CONTACT: KEITH TUCKER
PHONE: (562) 799-9469

LANDSCAPE:
SCOTT PETERSON LANDSCAPE ARCHITECT, INC.
2883 VIA RANCHEROS WAY
FALLBROOK, CA 92028
PHONE: (760) 842-8493
CONTACT: SCOTT PETTERSON

12 | CONTACTS | SCALE: NONE | 8

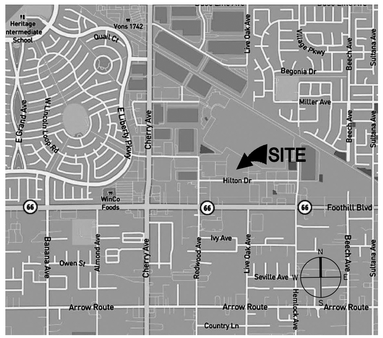

VICINITY MAP | SCALE: NONE | 8

	SHEET	SHEET TITLE	REV
		ARCHITECTURAL	
	T-1	COVER SHEET	3/17/25
	A-1.0	SITE PLAN	3/17/25
	A-1.1	SITE DETAILS	3/17/25
	A-1.2	SITE DETAILS	3/17/25
	A-2.1	FLOOR PLAN BUILDING-1	3/17/25
	A-2.2	FLOOR PLAN BUILDING-2	3/17/25
	A-2.3	ENLARGED FLOOR PLANS	3/17/25
	A-4.1	ROOF PLAN BUILDING-1	3/17/25
	A-4.2	ROOF PLAN BUILDING-2	3/17/25
	A-5.1	EXTERIOR ELEVATIONS BUILDING-1	3/17/25
	A-5.2	EXTERIOR ELEVATIONS BUILDING-2	3/17/25
	A-7.0	SECTIONS	3/17/25
	GP-1	CITY GENERAL NOTES	3/17/25

SHEET INDEX | SCALE: NONE | 4

SITE PLAN NOTES

1. EXISTING CONCRETE SIDEWALK
2. EXISTING FIRE HYDRANT
3. EXISTING CONCRETE CURB AND GUTTER
4. REMOVE EXISTING CONCRETE CURB AND REPLACE WITH NEW CONCRETE DRIVE APPROACH PER CITY STANDARDS, SEE CIVIL
5. EXISTING STREET LIGHT
6. NEW LANDSCAPING SHOWN HATCHED, SEE LANDSCAPE
7. NEW TRANSFORMER
8. NEW CONCRETE WALK, SEE 8/A-1.1
9. NEW CONCRETE CURB, SEE CIVIL
10. NEW ACCESSIBLE PARKING, SEE 2/A-1.1
11. EVCS CAPABLE (FUTURE) PARKING STALL, TYPICAL
12. NEW TUBE STEEL FENCE 6' HIGH, BLACK, SEE 8/A-1.2
13. NEW TUBE STEEL ROLLING GATE, 6' HIGH, BLACK, WITH FIRE DEPT. KNOX LOCK, SEE 1/A-1.2
14. PROPOSED 30' WIDE PUBLIC UTILITY, ACCESS AND DRAINAGE EASEMENT
15. NEW 4" WIDE WHITE PAINTED STRIPING FOR STANDARD 9'-0" WIDE X 19' DEEP PARKING STALLS, TYPICAL U.N.O.
16. NEW CONCRETE PAVING, SEE CIVIL
17. NEW GRATED INLET, SEE CIVIL
18. NEW SUBTERRANEAN INFILTRATION STRUCTURE, SEE CIVIL
19. NEW CONCRETE CURB RAMP, SEE 16/A-1.1
20. NEW SHORT TERM BICYCLE PARKING 4 BIKE CAPCITY, SEE 3/A-1.1
21. NEW CONCRETE SIDEWALK, SEE CIVIL
22. NEW CONCRETE STAIR
23. NEW DETECTOR CHECK ASSEMBLY
24. NEW TRUCK WELL CONCRETE PAVING, SEE CIVIL
25. NEW SUMP PUMP PIT
26. NEW TILT UP CONCRETE TRASH ENCLOSURE, 50% OF AREA TO BE USED FOR RECYCLING. NO HAZARDOUS WASTE TO BE STORED IN ANY TRASH BIN, SEE 15/A-1.2
27. NEW ELECTRICAL GEAR
28. NEW LONG TERM BICYCLE PARKING 3 BIKE CAPACITY WITH ELECTRIC PLUGS FOR CHARGING ELECTRIC BIKES, SEE 15/A-1.1
29. NEW ACCESSIBLE PATH OF TRAVEL
30. NEW ACCESSIBLE SITE ENTRANCE SIGN
31. NEW WATER METER
32. BUILDING SETBACK
33. NEW IRRIGATION METER
34. NEW FIRE HYDRANT PROVIDE BLUE REFLECTIVE PAVEMENT MARKER PER SBCFD STND. 508.5.2
35. NEW 4" WIDE WHITE DIAGONAL STRIPING AT 36" O.C.
36. NEW TUBE STEEL SWING GATE, 6' HIGH, BLACK WITH FIRE DEPT. KNOX LOCK, SEE 9/A-1.2
37. NEW FIRE RISER FOR NFPA-13 FIRE SPRINKLER SYSTEM WITH WATER FLOW MONITORING FIRE ALARM SYSTEM
38. NEW P.I.V.
39. NEW FIRE ACCESS LANE, 30' WIDE WITH MIN. 19' INSIDE TURNING RADIUS
40. NEW 6" CONCRETE CURB AND 1'-6" WIDE CONCRETE STRIP STAMPED WITH 6' GRID PATTERN TOTAL 2' WIDE DECORATIVE WALKING SURFACE AT PLANTERS ADJACENT TO PARKING STALLS, TYPICAL
41. 2' PARKING STALL OVERHANG
42. NEW CONCRETE CURB 6" HIGH X 24" WIDE WITH 6" STAMPED CONC. GRID PATTERN
43. NEW CONCRETE CURB RAMP, SEE 13/A-1.1
44. NEW MONUMENT SIGN WITH MIN. 6" HIGH ADDRESS NUMBERS PER CFC 505 AND SBCFD STND. 505.1
45. NEW FIRE DEPT. KEY BOX WITH TAMPER SWITCH MONITORED BY FIRE DEPT. APPROVED CENTRAL MONITORING DEVICE PER SBCFD STND. 506
46. NEW POLE MOUNTED LIGHT FIXTURE 25' HIGH
47. CLEAR LINE OF SIGHT WITH NO OBJECTS MORE THAN 30" HIGH
48. NEW SIGN: ANTI-IDLING
49. NEW SIGN: OFF SITE PARKING PROHIBITED
50. NEW SIGN: TRUCKING ROUTING PLAN DIRECTION
51. NEW SIGN: CONTACT INFORMATION FOR COMPLAINT REPRESENTATIVE
52. NEW SIGN: EVCS TOW AWAY SIGN
53. NEW ELECTRIC VEHICLE CHARGING STATION, TYPICAL
54. FUTURE ELECTRIC TRUCK CHARGING STATION
55. ELECTRICAL GEAR SPACE FOR 25% SIZE INCREASE
56. WHITE PAINTED TRUCK DIRECTIONAL ARROWS ON PAVEMENT, TYPICAL
57. NEW STREET LIGHT
58. NEW ACCESSIBLE ELECTRIC VEHICLE CHARGING STATION, SEE 17/A-1.1
59. NEW RETAINING WALL, SEE CIVIL
60. NEW TILT UP CONCRETE SCREEN WALL 4'-0" HIGH PAINT COLOR-A
61. NEW TRUCK ACCESS DRIVEWAY PER CITY STANDARDS, SEE CIVIL
62. 5' STREET DEDICATION
63. EXISTING BUILDING
64. INGRESS ONLY DRIVE AISLE
65. NEW SIGN: TRUCK ENTRANCE ONLY

BUILDING AREAS AND PARKING CALCULATION

Name	Occ.	Ground Floor Area	Level-2 Floor Area	Total Area	Parking Ratio	Parking Required	Parking Provided
Building-1 Office	B	2,248	2,420	4,668	250	18.67	
Building-1 Warehouse	S-1	36,550	0	36,550	1,000	36.55	56
Building-2 Office	B	2,248	2,420	4,668	250	18.67	
Building-2 Warehouse	S-1	26,099	0	26,099	1,000	26.10	48
Total		67,145	4,840	71,985		99.99	104

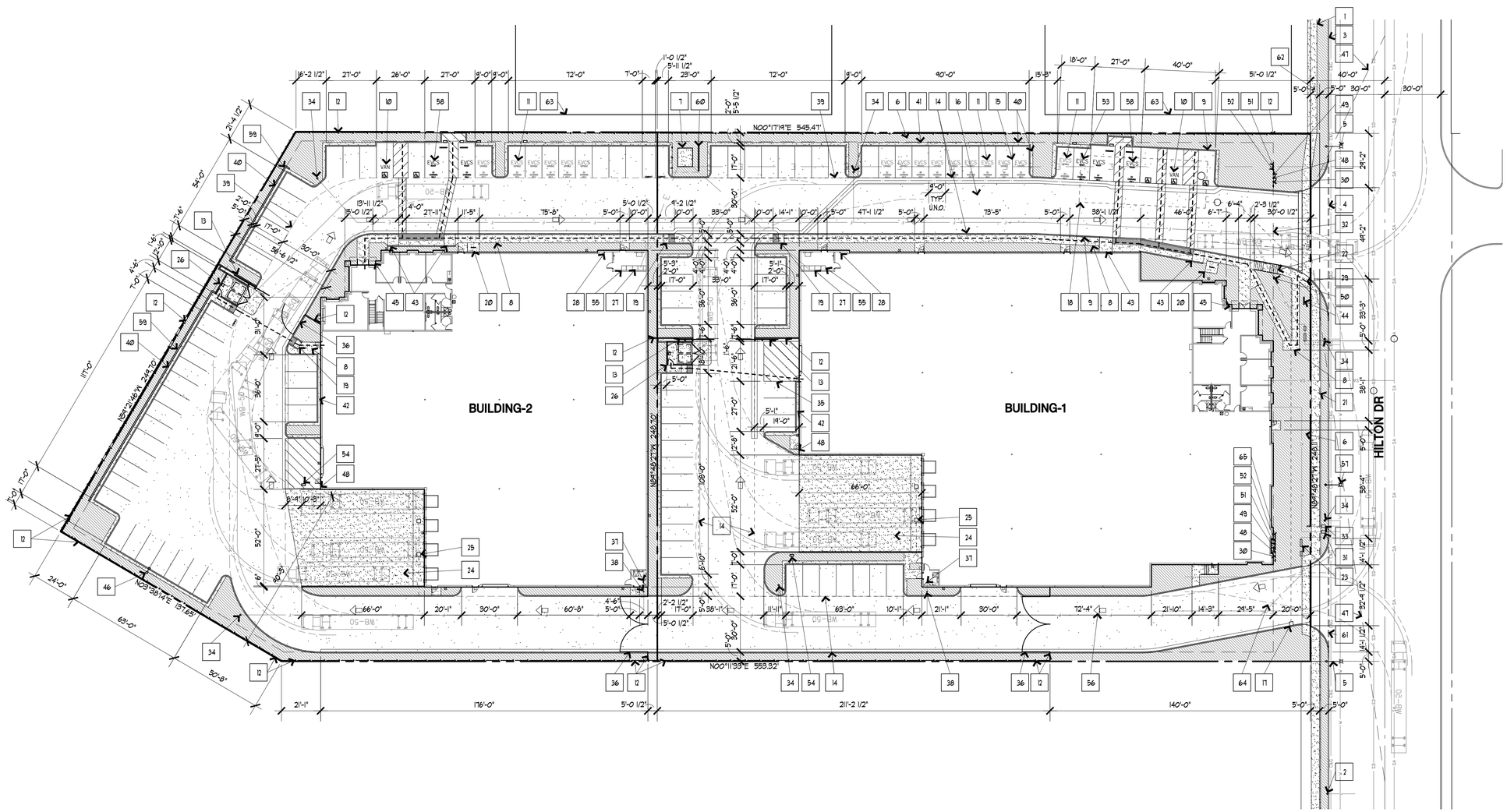

C.VANDERHOEK
ARCHITECTS
4109 E. Fernwood Ave
Orange, CA 92869
Tel: 714-308-7662

HILTON INDUSTRIAL FACILITY

HILTON DRIVE
FONTANA, CA

MASTER CASE NO. 18-053 TPM NO. 18-005 DESIGN REVIEW NO. 18-010

PRELIMINARY SITE PLAN

REVISION:

DATE MARCH 17, 2025

JOB NO: 21088
SHEET:

A-1.0

OF .. SHEETS

© 2025 C. VanDerHoek Architects, Inc. expressly reserves its common law copyright and other property rights in these plans. These plans are not to be reproduced, changed or copied in any form or manner whatsoever, nor are they to be assigned to any third party, without first obtaining the written permission and consent of C. VanDerHoek Architects, Inc.

PRELIMINARY SITE PLAN

SCALE: 1"=30'-0"

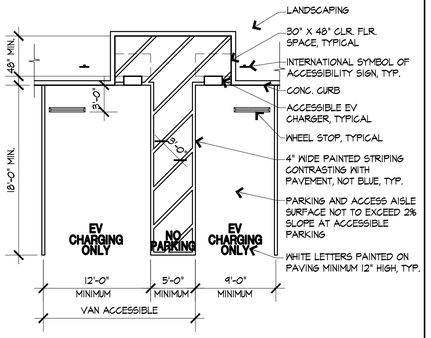

EVCS ACCESS. PARKING — SCALE: 1/8"=1'-0" — 17

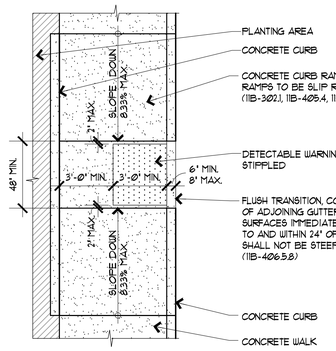

ACCESS. CURB RAMP — SCALE: NONE — 13

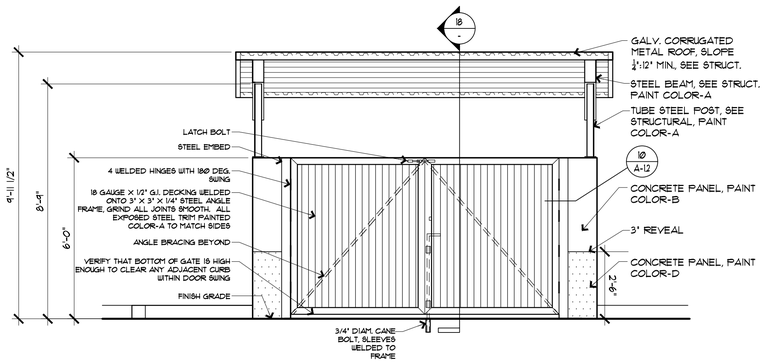

TRASH ENLCOSURE ELEVATION — SCALE: 3/8"=1'-0" — 5

1. ACCESSIBLE PARKING SPACES SHALL BE DESIGNATED AS RESERVED BY A SIGN SHOWING THE SYMBOL OF ACCESSIBILITY. SIGN SHALL BE 70 SQUARE INCHES MINIMUM. VAN ACCESSIBLE SPACES SHALL HAVE AN ADDITIONAL SIGN, "VAN ACCESSIBLE" MOUNTED BELOW THE SYMBOL OF ACCESSIBILITY.
2. PROVIDE MINIMUM VERTICAL CLEARANCE OF 114 INCHES (9'-6") AT ACCESSIBLE PASSENGER LOADING ZONES AND ALONG AT LEAST ONE VEHICLE ACCESS ROUTE TO SUCH AREAS FROM SITE ENTRANCE(S) AND EXIT(S). AT VAN ACCESSIBLE PARKING SPACES, PROVIDE MINIMUM VERTICAL CLEARANCE OF 98 INCHES (8'-2") AT THE PARKING SPACE AND ALONG AT LEAST ONE VEHICLE ACCESS ROUTE TO SUCH SPACES FROM SITE ENTRANCE(S) AND EXIT(S).
3. A SIGN SHALL BE POSTED IN A CONSPICUOUS PLACE AT EACH ENTRANCE TO OFF STREET PARKING FACILITIES OR IMMEDIATELY ADJACENT TO AND VISIBLE FROM EACH STALL OR SPACE. THE SIGN SHALL NOT BE LESS THAN 17 INCHES WIDE BY 22 INCHES HIGH, WHICH CLEARLY AND CONSPICUOUSLY STATES THE FOLLOWING:
   "UNAUTHORIZED VEHICLES PARKED IN DESIGNATED ACCESSIBLE SPACES NOT DISPLAYING DISTINGUISHING PLACARDS OR SPECIAL LICENSE PLATES ISSUED PERSONS WITH DISABILITIES WILL BE TOWED AWAY AT OWNER'S EXPENSE. TOWED VEHICLES MAY BE RECLAIMED AT_____, OR BY TELEPHONING_____." NOTE: BLANK SPACES TO BE FILLED IN WITH THE APPROPRIATE INFORMATION AND TO BE A PERMANENT PART OF THE SIGN.

02100-01

ACCESS. PKG. GEN. NOTES — SCALE: NONE — 1

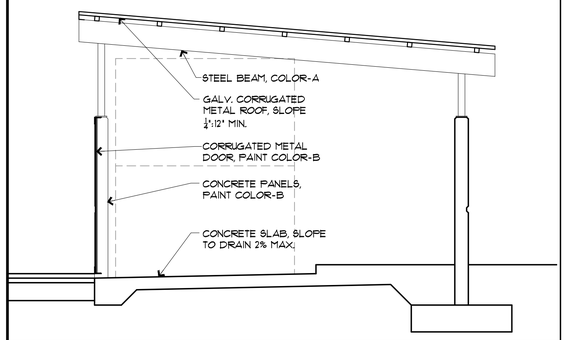

TRASH ENCL. ELEV. — SCALE: 3/8"=1'-0" — 18

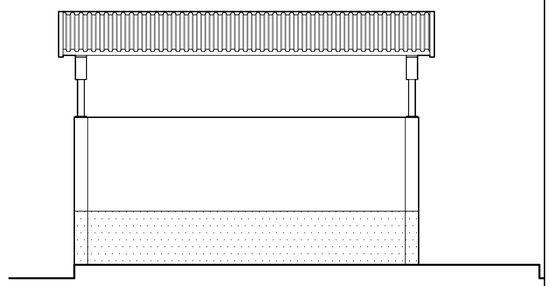

TRASH ENCLOSURE ELEV. — SCALE: 3/8"=1'-0" — 14

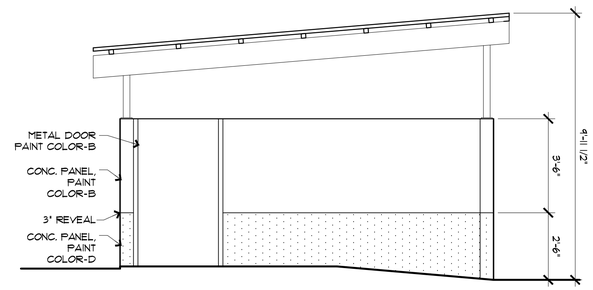

TRASH ENCLOSURE ELEVATION — SCALE: 3/8"=1'-0" — 6

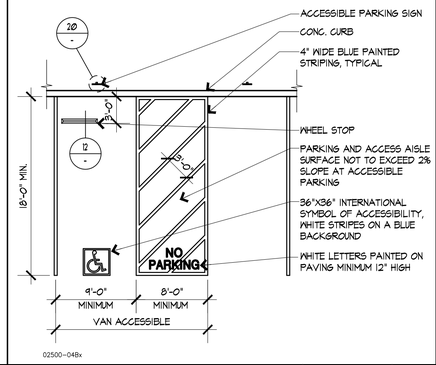

ACCESS. PARKING — SCALE: 1/8"=1'-0" — 2

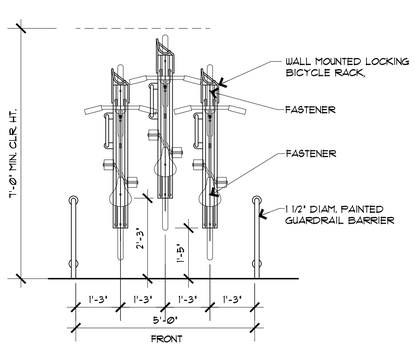

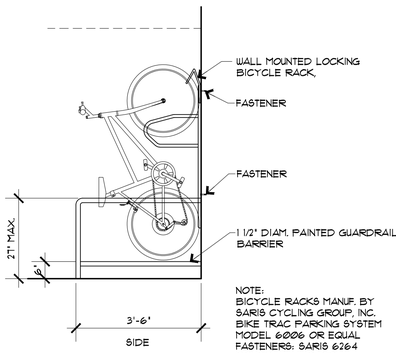

NOTE:
BICYCLE RACKS MANUF. BY SARIS CYCLING GROUP, INC. BIKE TRAC PARKING SYSTEM MODEL 6006 OR EQUAL FASTENERS: SARIS 6264 CONCRETE ANCHOR

BICYCLE RACK — SCALE: 1/2"=1'-0" — 15

7

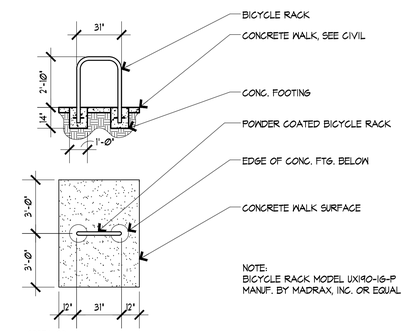

NOTE:
BICYCLE RACK MODEL UX190-16-P MANUF. BY MADRAX, INC. OR EQUAL

BICYCLE RACK — SCALE: 1/4"=1'-0" — 3

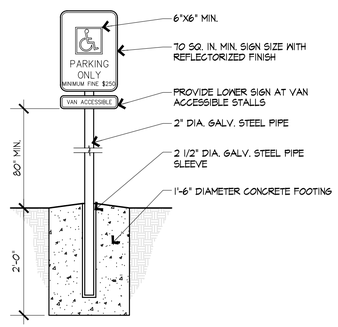

ACCESS. PKG. SIGN — SCALE: 3/4"=1'-0" — 20

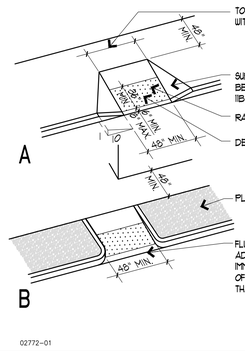

ACCESS. CURB RAMP — SCALE: NONE — 16

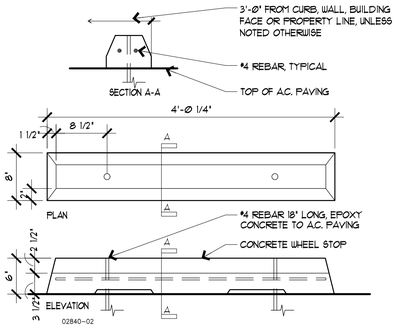

WHEEL STOP — SCALE: 1"=1'-0" — 12

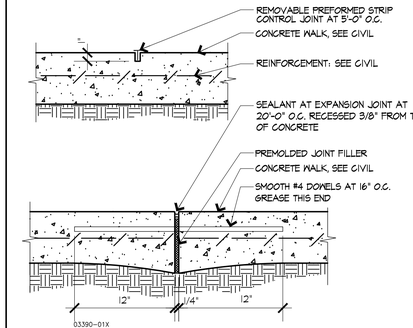

CONC. CONTROL + EXP. JOINT — SCALE: 1 1/2"=1'-0" — 8

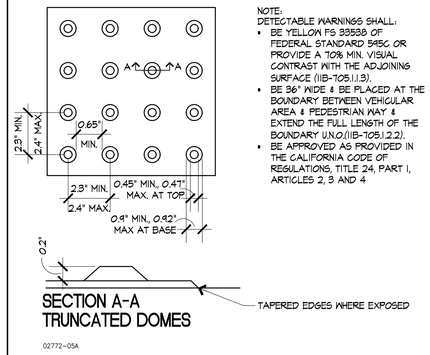

NOTE:
DETECTABLE WARNINGS SHALL:
- BE YELLOW TS 33538 OF FEDERAL STANDARD 595C OR PROVIDE A 70% MIN. VISUAL CONTRAST WITH THE ADJOINING SURFACE (11B-705.1.1.3).
- BE 36" WIDE & BE PLACED AT THE BOUNDARY BETWEEN VEHICULAR AREA & PEDESTRIAN WAY & EXTEND THE FULL LENGTH OF THE BOUNDARY U.N.O.(11B-705.1.2.2).
- BE APPROVED AS PROVIDED IN THE CALIFORNIA CODE OF REGULATIONS, TITLE 24, PART 1, ARTICLES 2, 3 AND 4

DETECTABLE WARNING — SCALE: NONE — 4

C.VANDERHOEK ARCHITECTS
4109 E. Fernwood Ave
Orange, CA 92869
Tel: 714-308-7662

HILTON INDUSTRIAL FACILITY

HILTON DRIVE
FONTANA, CA

MASTER CASE NO. 18-053 TPM NO. 18-005 DESIGN REVIEW NO. 18-010

SITE DETAILS

REVISION:

DATE MARCH 17, 2025

JOB NO: 21088
SHEET:

A-1.1

OF .. SHEETS

© 2025 C. VanDerHoek Architects, Inc. expressly reserves its common law copyright and other property rights in these plans. These plans are not to be reproduced, changed or copied in any form or manner whatsoever, nor are they to be assigned to any third party, without first obtaining the written permission and consent of C. VanDerHoek Architects, Inc.

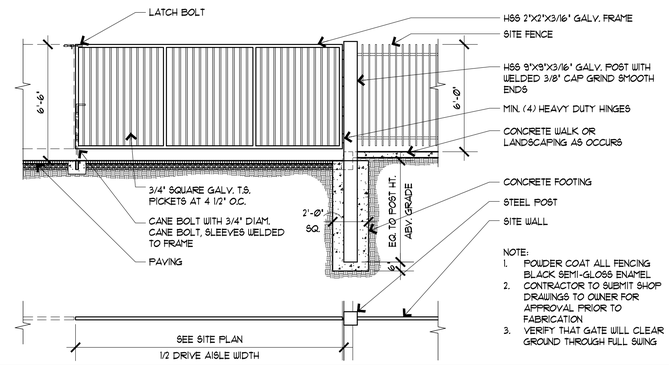

NOTE:
1. POUDER COAT ALL FENCING BLACK SEMI-GLOSS ENAMEL
2. CONTRACTOR TO SUBMIT SHOP DRAWINGS TO OWNER FOR APPROVAL PRIOR TO FABRICATION
3. VERIFY THAT GATE WILL CLEAR GROUND THROUGH FULL SWING

SWING GATE

SCALE: 1/4"=1'-0" | 9

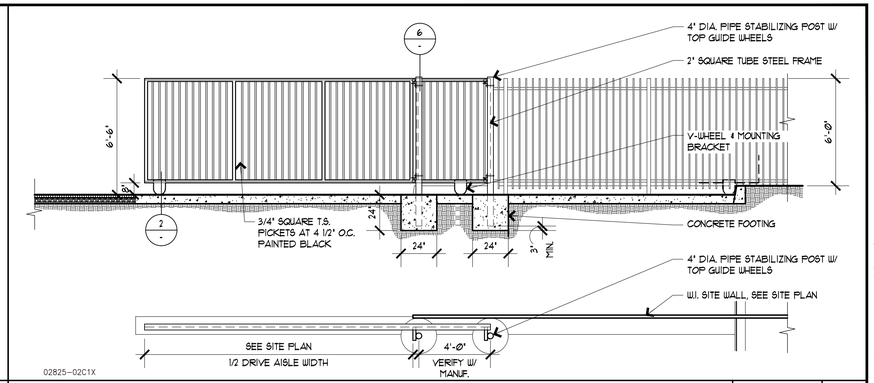

ROLLING GATE

SCALE: 1/4"=1'-0" | 1

NOTE:
TRASH BINS AND RECYCLING BINS SHALL BE CONSTRUCTED OF NONCOMBUSTIBLE MATERIALS

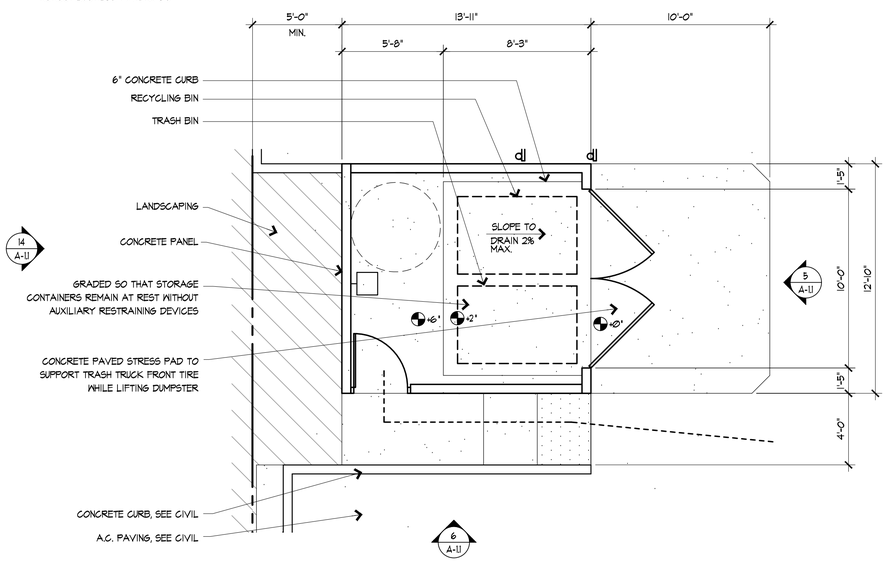

TRASH ENCLOSURE

SCALE: 1/4"=1'-0" | 15

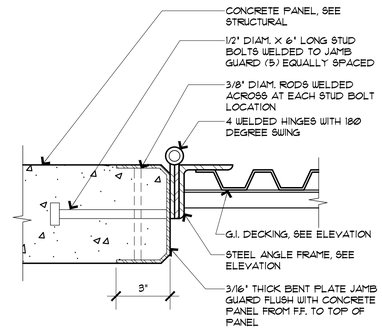

GATE HINGE

SCALE: 3"=1'-0" | 10

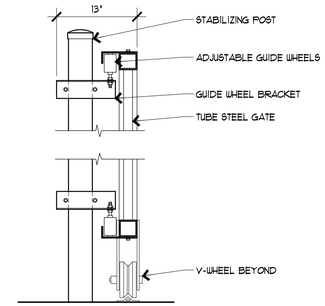

GUIDE WHEELS

SCALE: N.T.S. | 6

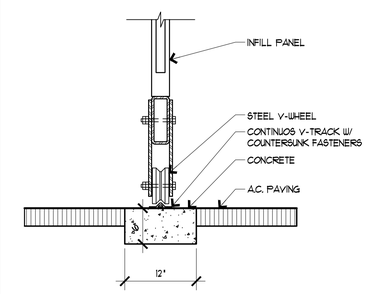

ROLLER GATE (WHEEL)

SCALE: N.T.S. | 2

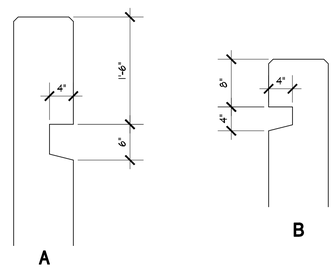

CORNICE

SCALE: 1"=1'-0" | 11

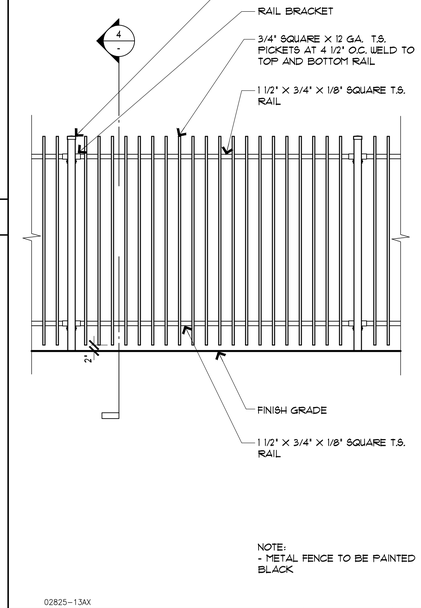

NOTE:
- METAL FENCE TO BE PAINTED BLACK

TUBE STEEL FENCE

SCALE: 1/2"=1'-0" | 8

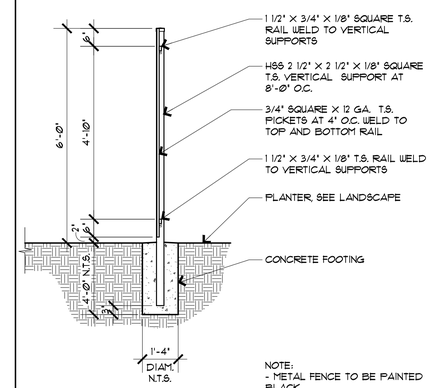

NOTE:
- METAL FENCE TO BE PAINTED BLACK

TUBE STEEL FENCE

SCALE: 1/2"=1'-0" | 4

.	20	16	12

C.VANDERHOEK ARCHITECTS
4109 E. Fernwood Ave
Orange, CA 92869
Tel: 714-308-7662

HILTON INDUSTRIAL FACILITY

HILTON DRIVE
FONTANA, CA

MASTER CASE NO. 18-053 TPM NO. 18-005 DESIGN REVIEW NO. 18-010

SITE DETAILS

REVISION:

DATE MARCH 17, 2025

JOB NO: 21088
SHEET:

A-1.2
OF .. SHEETS

© 2025 C. VanDerHoek Architects, Inc. expressly reserves its common law copyright and other property rights in these plans. These plans are not to be reproduced, changed or copied in any form or manner whatsoever, nor are they to be assigned to any third party, without first obtaining the written permission and consent of C. VanDerHoek Architects, Inc.

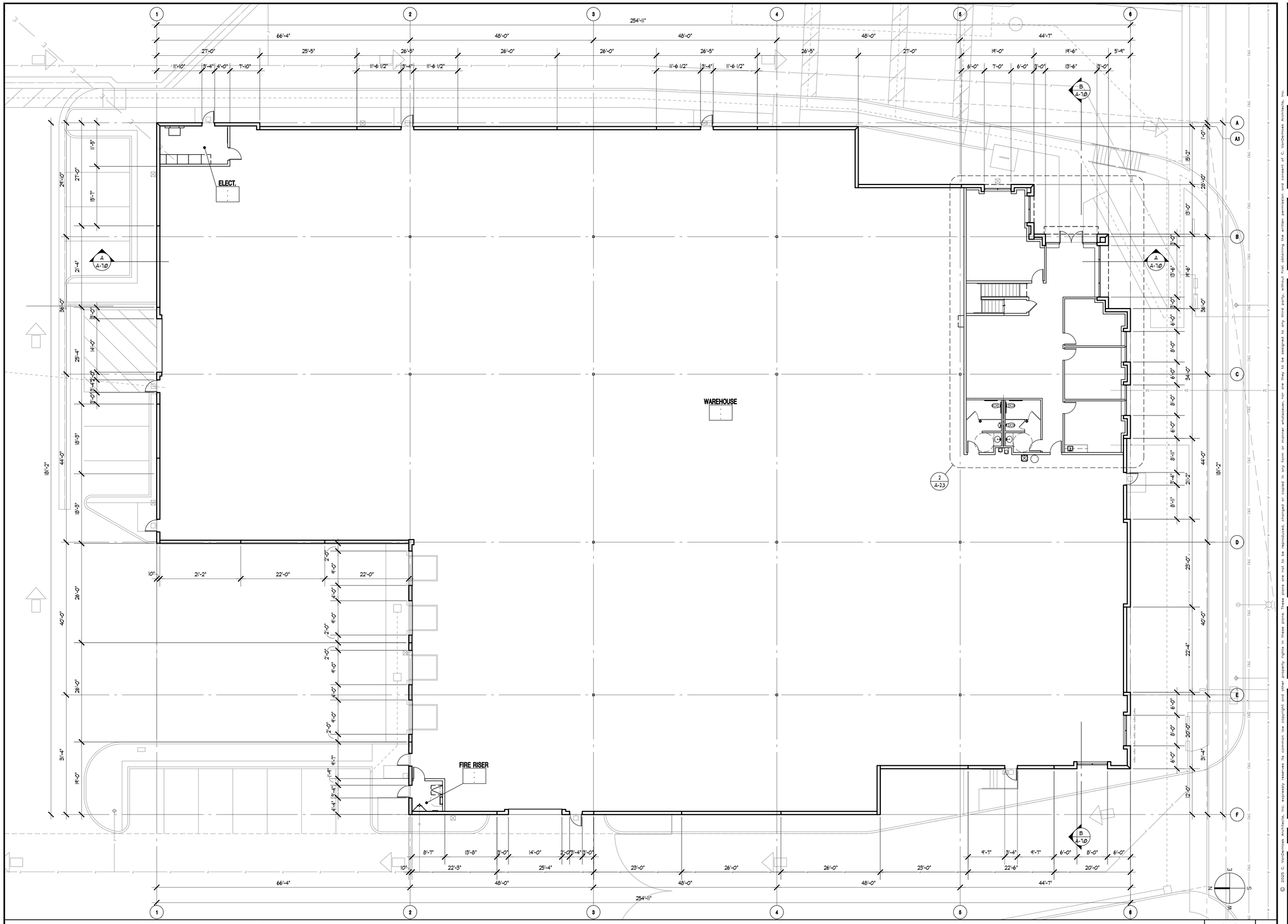

PRELIMINARY FLOOR PLAN BUILDING-1 LEVEL-1

SCALE: 3/32"=1'-0"

4

C.VANDERHOEK
ARCHITECTS
4109 E. Fernwood Ave
Orange, CA 92869
Tel: 714-308-7662

HILTON INDUSTRIAL FACILITY

HILTON DRIVE
FONTANA, CA

MASTER CASE NO. 18-053 TPM NO. 18-005 DESIGN REVIEW NO. 18-010

PRELIMINARY FLOOR PLAN BUILDING-1

REVISION:

DATE MARCH 17, 2025

JOB NO: 21088
SHEET:

A-2.1

OF .. SHEETS

© 2025 C. VanDerHoek Architects, Inc. expressly reserves its common law copyright and other property rights in these plans. These plans are not to be reproduced, changed or copied in any form or manner whatsoever, nor are they to be assigned to any third party, without first obtaining the written permission and consent of C. VanDerHoek Architects, Inc.

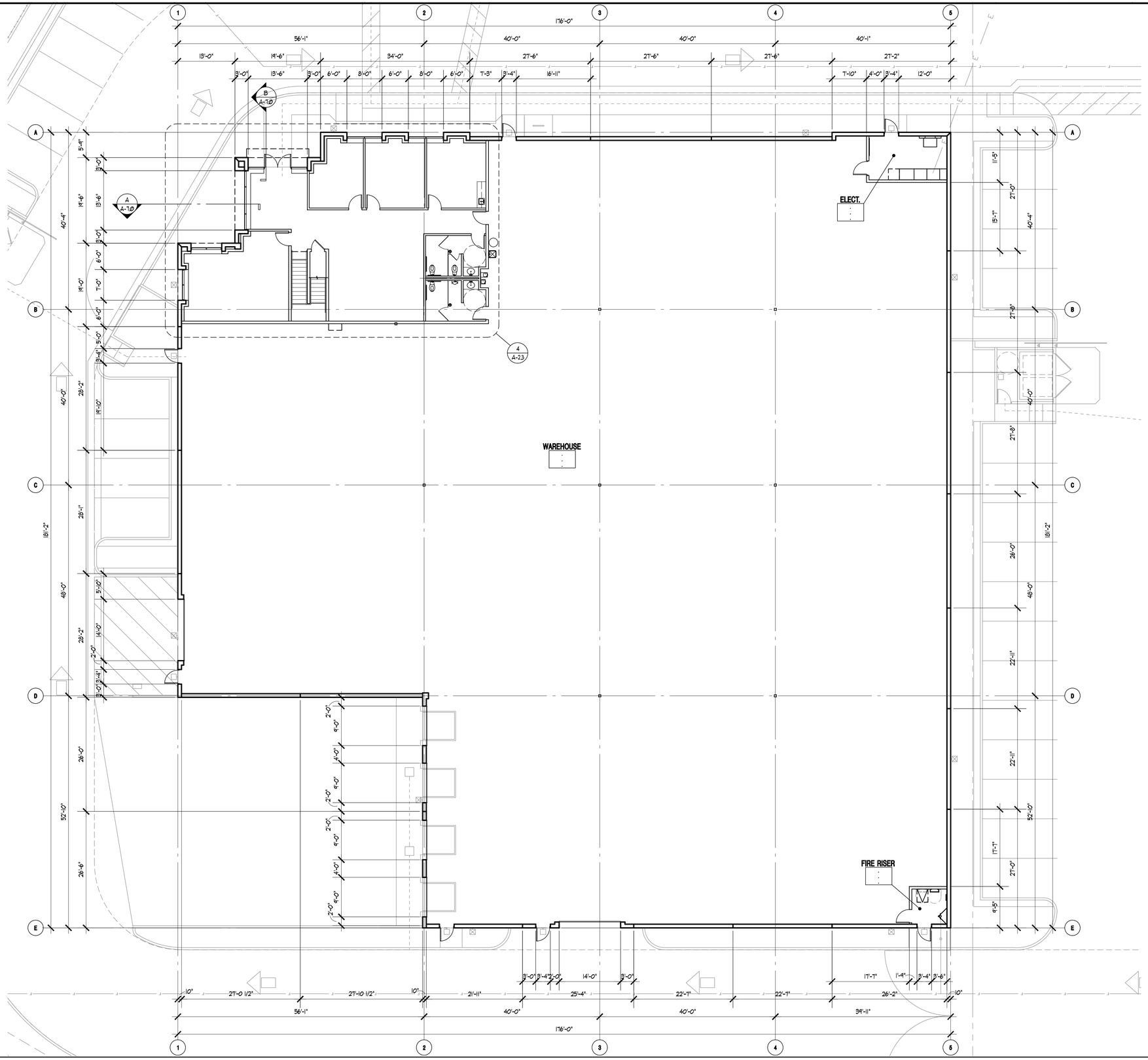

PRELIMINARY FLOOR PLAN BUILDING-2 LEVEL-1

SCALE: 3/32"=1'-0"

4

C.VANDERHOEK
ARCHITECTS
4109 E. Fernwood Ave
Orange, CA 92869
Tel: 714-308-7662

HILTON INDUSTRIAL FACILITY

HILTON DRIVE
FONTANA, CA

MASTER CASE NO. 18-053 TPM NO. 18-005 DESIGN REVIEW NO. 18-010

PRELIMINARY FLOOR PLAN BUILDING-2

REVISION:

DATE MARCH 17, 2025

JOB NO: 21088
SHEET:

A-2.2

OF .. SHEETS

© 2025 C. VanDerHoek Architects, Inc. expressly reserves its common law copyright and other property rights in these plans. These plans are not to be reproduced, changed or copied in any form or manner whatsoever, nor are they to be assigned to any third party, without first obtaining the written permission and consent of C. VanDerHoek Architects, Inc.

17 | 13

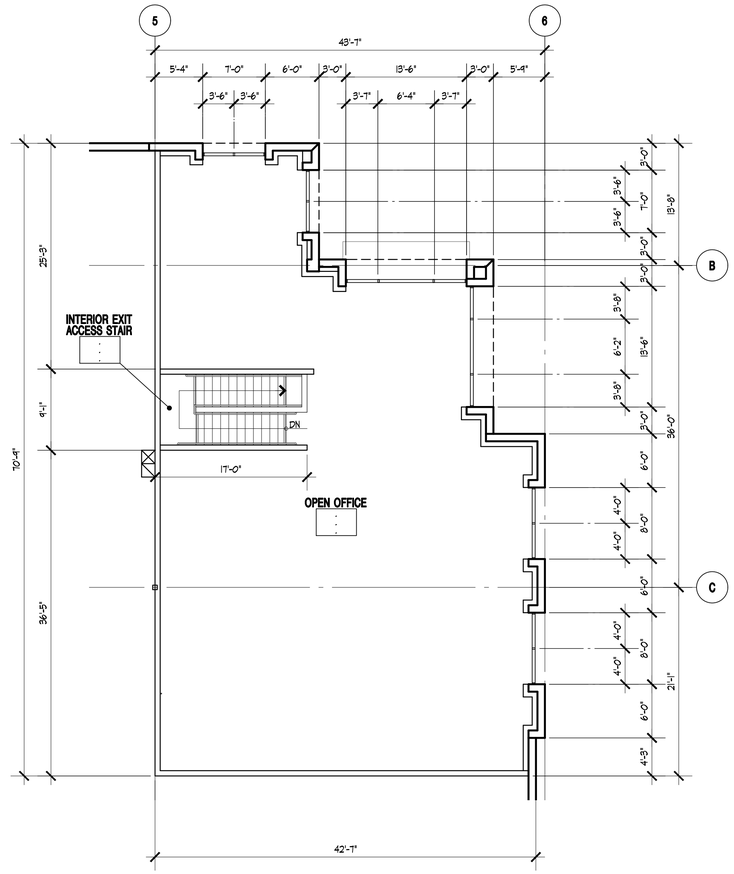

18 | 15 **PRELIMINARY FLOOR PLAN BUILDING-1 LEVEL-2** SCALE: 1/8"=1'-0" | 10

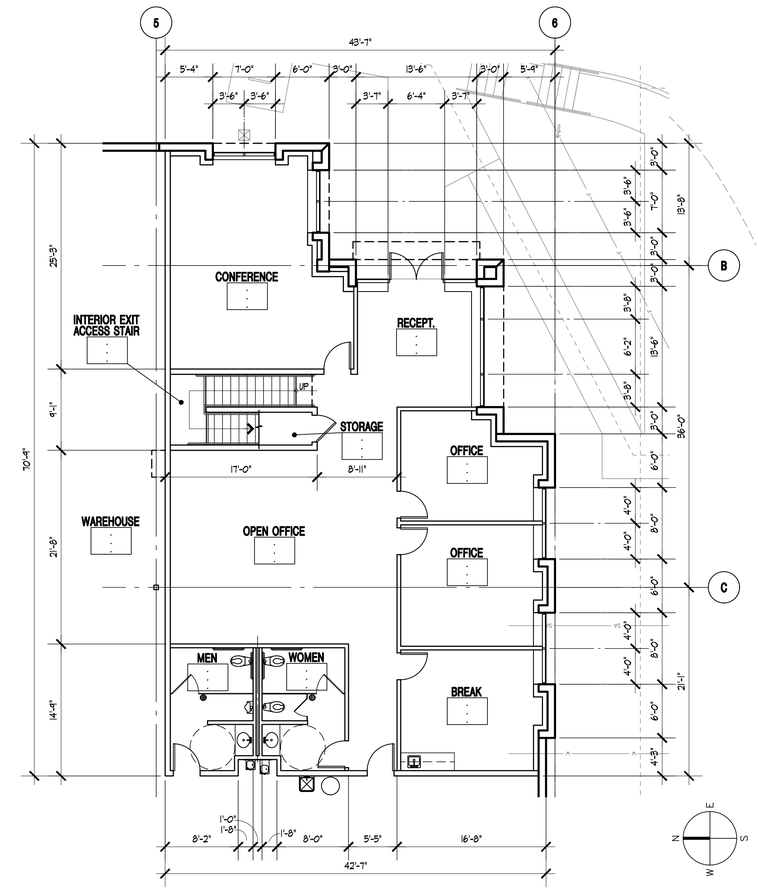

PRELIMINARY FLOOR PLAN BUILDING-1 LEVEL-1 SCALE: 1/8"=1'-0" | 2

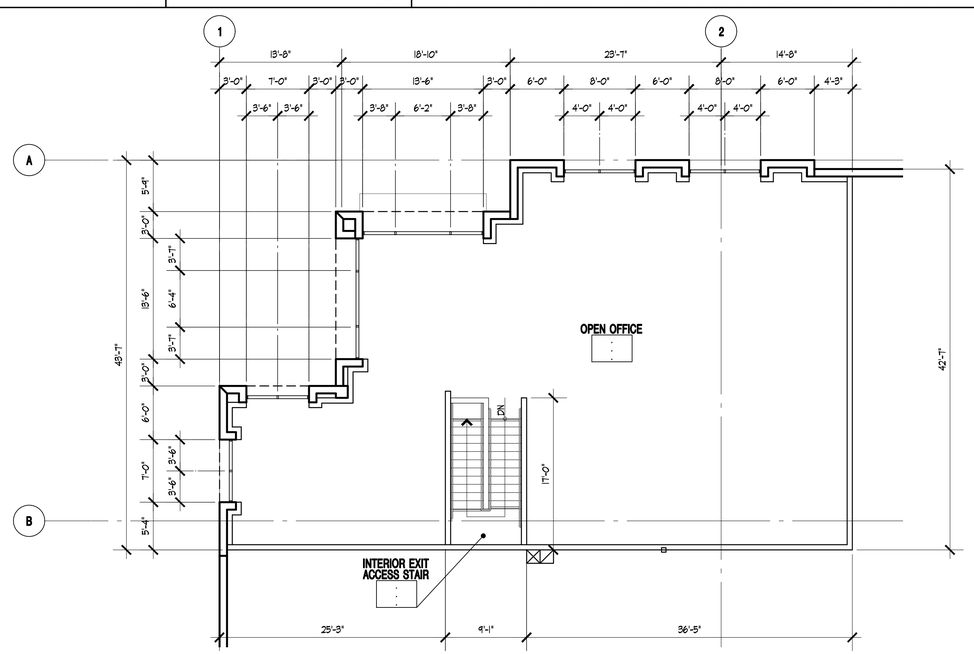

PRELIMINARY FLOOR PLAN BUILDING-2 LEVEL-2 SCALE: 1/8"=1'-0" | 12

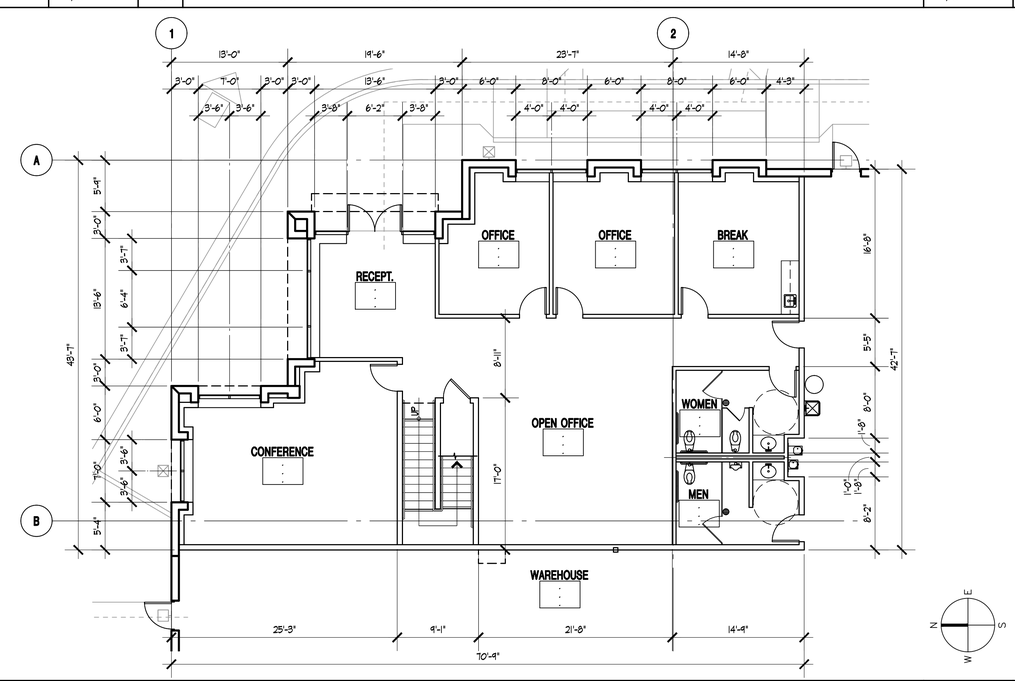

PRELIMINARY FLOOR PLAN BUILDING-2 LEVEL-1 SCALE: 1/8"=1'-0" | 4

C.VANDERHOEK
ARCHITECTS
4109 E. Fernwood Ave
Orange, CA 92869
Tel: 714-308-7662

HILTON INDUSTRIAL FACILITY

HILTON DRIVE
FONTANA, CA

MASTER CASE NO. 18-053 TPM NO. 18-005 DESIGN REVIEW NO. 18-010

PRELIMINARY FLOOR PLANS BUILDING-1 & 2

REVISION:

DATE MARCH 17, 2025

JOB NO: 21088
SHEET:

A-2.3
OF .. SHEETS

© 2025 C. VanDerHoek Architects, Inc. expressly reserves its common law copyright and other property rights in these plans. These plans are not to be reproduced, changed or copied in any form or manner whatsoever, nor are they to be assigned to any third party, without first obtaining the written permission and consent of C. VanDerHoek Architects, Inc.

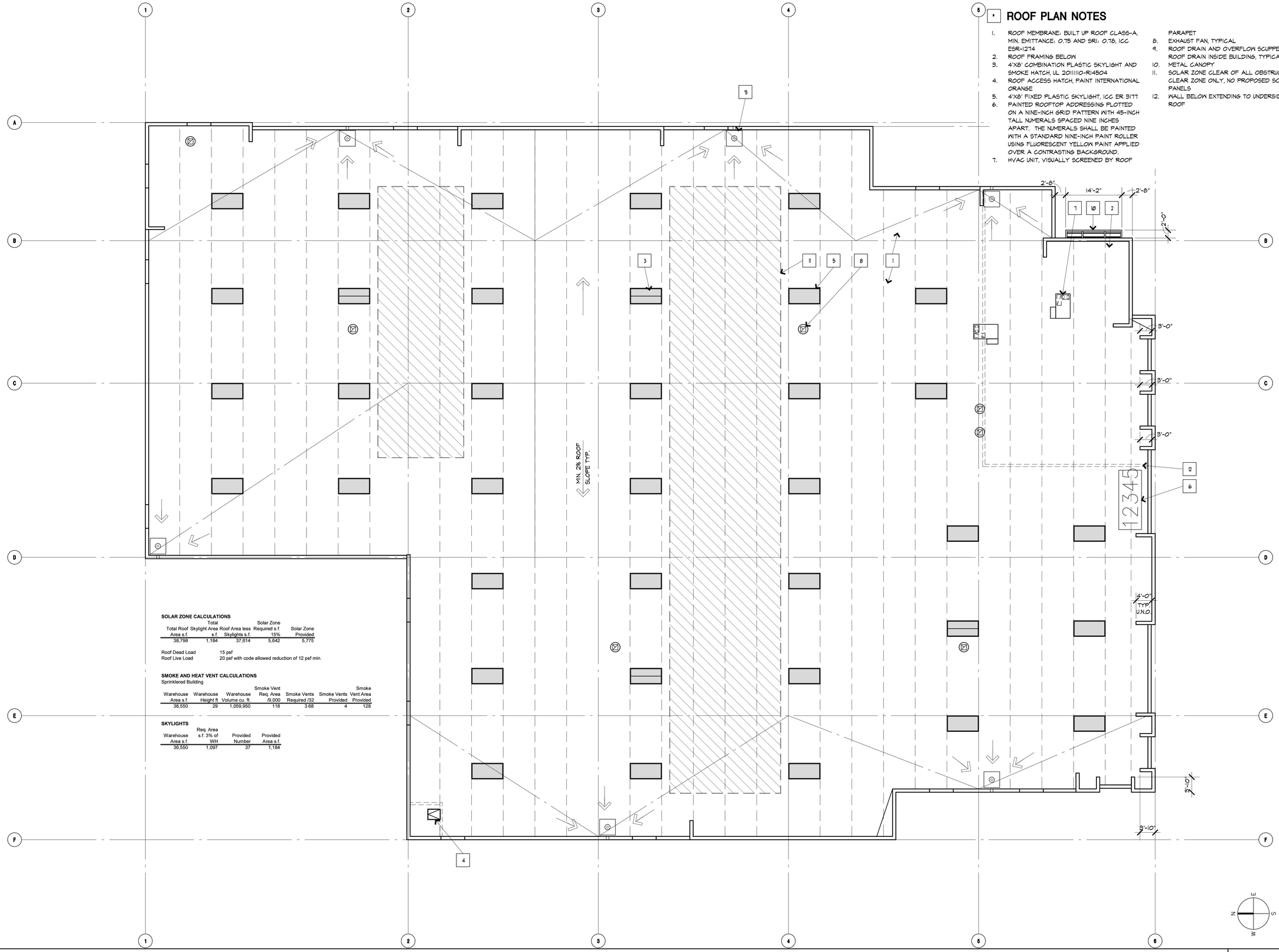

ROOF PLAN NOTES

1. ROOF MEMBRANE: BUILT UP ROOF CLASS-A, MIN. EMITTANCE: 0.75 AND SRI: 0.78, ICC ESR-1274
2. ROOF FRAMING BELOW
3. 4'X8' COMBINATION PLASTIC SKYLIGHT AND SMOKE HATCH, UL 2011110-R14504
4. ROOF ACCESS HATCH, PAINT INTERNATIONAL ORANGE
5. 4'X8' FIXED PLASTIC SKYLIGHT, ICC ER 3177
6. PAINTED ROOFTOP ADDRESSING PLOTTED ON A NINE-INCH GRID PATTERN WITH 45-INCH TALL NUMERALS SPACED NINE INCHES APART. THE NUMERALS SHALL BE PAINTED WITH A STANDARD NINE-INCH PAINT ROLLER USING FLUORESCENT YELLOW PAINT APPLIED OVER A CONTRASTING BACKGROUND.
7. HVAC UNIT, VISUALLY SCREENED BY ROOF PARAPET
8. EXHAUST FAN, TYPICAL
9. ROOF DRAIN AND OVERFLOW SCUPPER, RUN ROOF DRAIN INSIDE BUILDING, TYPICAL
10. METAL CANOPY
11. SOLAR ZONE CLEAR OF ALL OBSTRUCTIONS, CLEAR ZONE ONLY, NO PROPOSED SOLAR PANELS
12. WALL BELOW EXTENDING TO UNDERSIDE OF ROOF

SOLAR ZONE CALCULATIONS

Total Roof Area s.f.	Skylight Area s.f.	Total Roof Area less Skylights s.f.	Solar Zone Required s.f. 15%	Solar Zone Provided
38,798	1,184	37,614	5,642	5,775

Roof Dead Load 15 psf
Roof Live Load 20 psf with code allowed reduction of 12 psf min.

SMOKE AND HEAT VENT CALCULATIONS
Sprinklered Building

Warehouse Area s.f.	Warehouse Height ft	Warehouse Volume cu. ft.	Smoke Vent Req. Area /9,000	Smoke Vents Required /32	Smoke Vents Provided	Smoke Vent Area Provided
36,550	29	1,059,950	118	3.68	4	128

SKYLIGHTS

Warehouse Area s.f.	Req. Area s.f. 3% of WH	Provided Number	Provided Area s.f.
36,550	1,097	37	1,184

PRELIMINARY ROOF PLAN BUILDING-1

SCALE: 3/32"=1'-0"

4

C.VANDERHOEK
ARCHITECTS
4109 E. Fernwood Ave
Orange, CA 92869
Tel: 714-308-7662

HILTON INDUSTRIAL FACILITY
.
HILTON DRIVE
FONTANA, CA
MASTER CASE NO. 18-053 TPM NO. 18-005 DESIGN REVIEW NO. 18-010

PRELIMINARY ROOF PLAN BUILDING-1

REVISION:

DATE MARCH 17, 2025

JOB NO: 21088
SHEET:

A-4.1
. OF .. SHEETS

© 2025 C. VanDerHoek Architects, Inc. expressly reserves its common law copyright and other property rights in these plans. These plans are not to be reproduced, changed or copied in any form or manner whatsoever, nor are they to be assigned to any third party, without first obtaining the written permission and consent of C. VanDerHoek Architects, Inc.

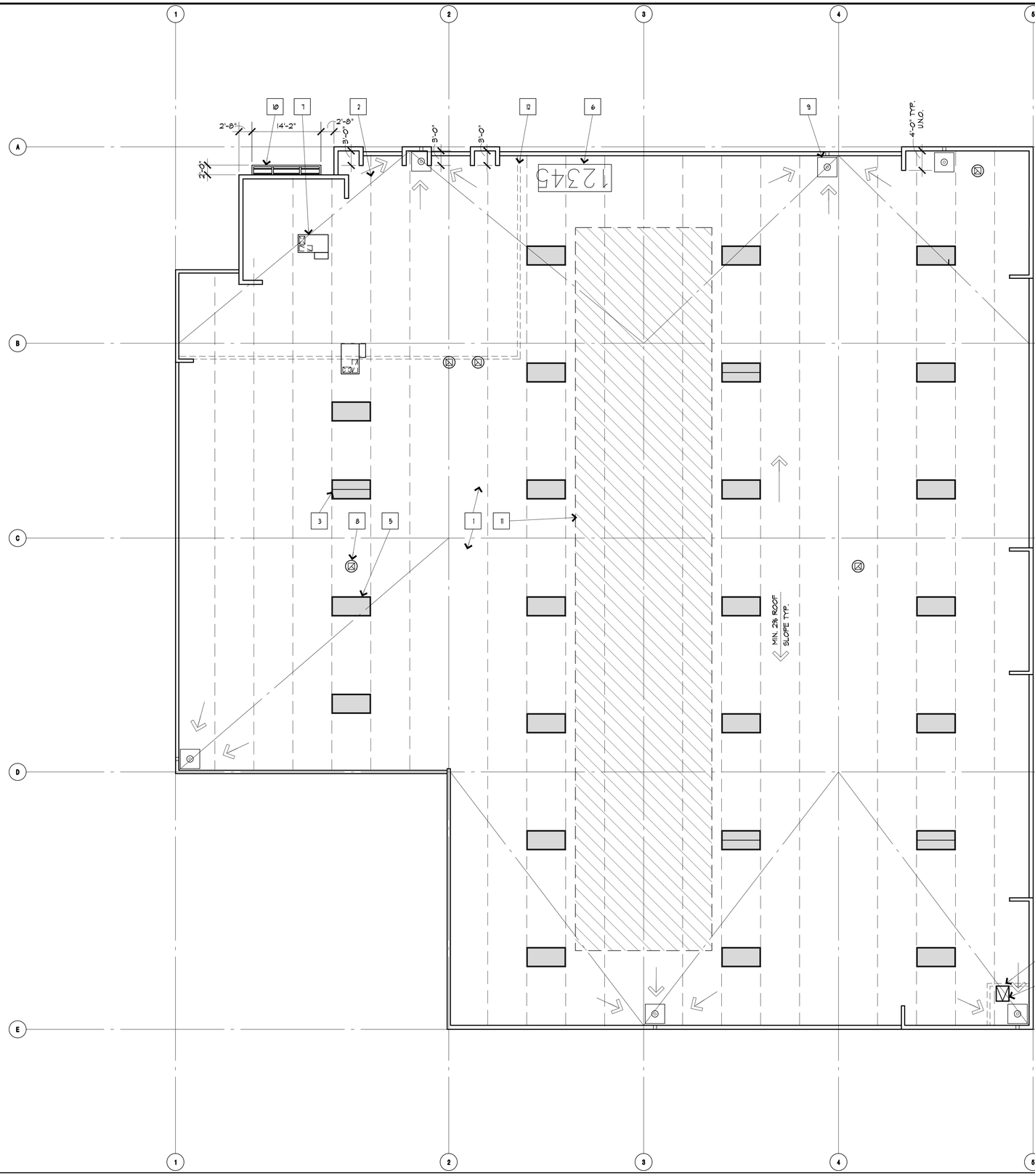

ROOF PLAN NOTES

1. ROOF MEMBRANE: BUILT UP ROOF CLASS-A, MIN. EMITTANCE: 0.75 AND SRI: 0.78, ICC ESR-1274
2. ROOF FRAMING BELOW
3. 4'X8' COMBINATION PLASTIC SKYLIGHT AND SMOKE HATCH, UL 2011110-R14504
4. ROOF ACCESS HATCH, PAINT INTERNATIONAL ORANGE
5. 4'X8' FIXED PLASTIC SKYLIGHT, ICC ER 3177
6. PAINTED ROOFTOP ADDRESSING PLOTTED ON A NINE-INCH GRID PATTERN WITH 45-INCH TALL NUMERALS SPACED NINE INCHES APART. THE NUMERALS SHALL BE PAINTED WITH A STANDARD NINE-INCH PAINT ROLLER USING FLUORESCENT YELLOW PAINT APPLIED OVER A CONTRASTING BACKGROUND.
7. HVAC UNIT, VISUALLY SCREENED BY ROOF PARAPET
8. EXHAUST FAN, TYPICAL
9. ROOF DRAIN AND OVERFLOW SCUPPER, RUN ROOF DRAIN INSIDE BUILDING, TYPICAL
10. METAL CANOPY
11. SOLAR ZONE CLEAR OF ALL OBSTRUCTIONS, CLEAR ZONE ONLY, NO PROPOSED SOLAR PANELS
12. WALL BELOW EXTENDING TO UNDERSIDE OF ROOF

SOLAR ZONE CALCULATIONS

Total Roof Area s.f.	Total Skylight Area s.f.	Roof Area less Skylights s.f.	Solar Zone Required s.f. 15%	Solar Zone Provided
28,347	800	27,547	4,132	4,156

Roof Dead Load 15 psf
Roof Live Load 20 psf with code allowed reduction of 12 psf min.

SMOKE AND HEAT VENT CALCULATIONS
Sprinklered Building

Warehouse Area s.f.	Warehouse Height ft.	Warehouse Volume cu. ft.	Smoke Vent Req. Area /9,000	Smoke Vents Required /32	Smoke Vents Provided	Smoke Vent Area Provided
28,099	29	758,671	84	2.63	3	96

SKYLIGHTS

Warehouse Area s.f.	Req. Area s.f. 3% of WH	Provided Number	Provided Area s.f.
28,099	783	25	800

PRELIMINARY ROOF PLAN BUILDING-2

SCALE: 3/32"=1'-0"

4

C.VANDERHOEK ARCHITECTS
4109 E. Fernwood Ave
Orange, CA 92869
Tel: 714-308-7662

HILTON INDUSTRIAL FACILITY
.
HILTON DRIVE
FONTANA, CA
MASTER CASE NO. 18-053 TPM NO. 18-005 DESIGN REVIEW NO. 18-010

PRELIMINARY ROOF PLAN BUILDING-2

REVISION:

DATE MARCH 17, 2025

JOB NO: 21088
SHEET:

A-4.2

. OF .. SHEETS

© 2025 C. VanDerHoek Architects, Inc. expressly reserves its common law copyright and other property rights in these plans. These plans are not to be reproduced, changed or copied in any form or manner whatsoever, nor are they to be assigned to any third party, without first obtaining the written permission and consent of C. VanDerHoek Architects, Inc.

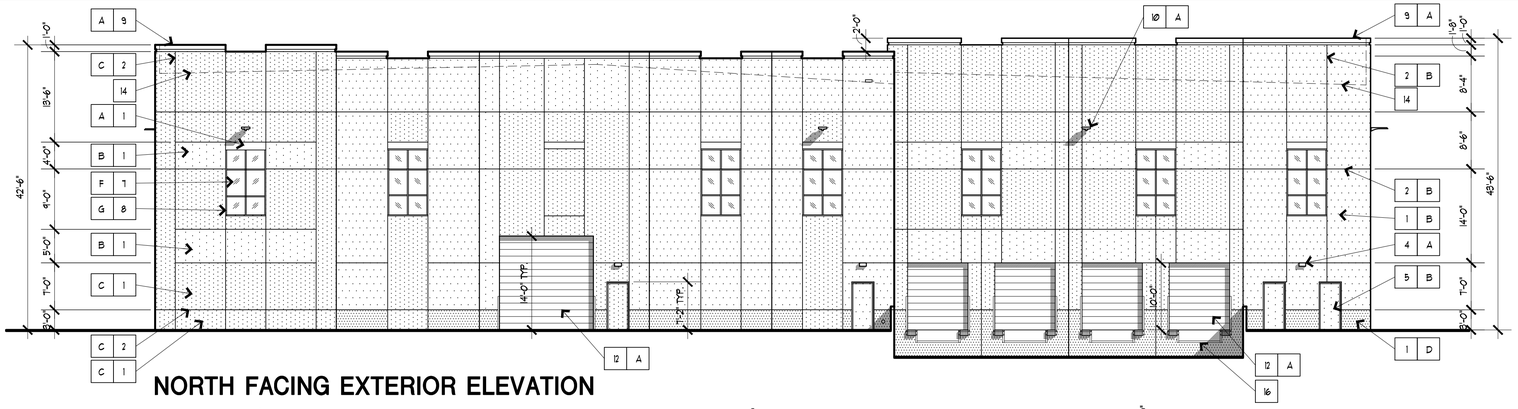

NORTH FACING EXTERIOR ELEVATION

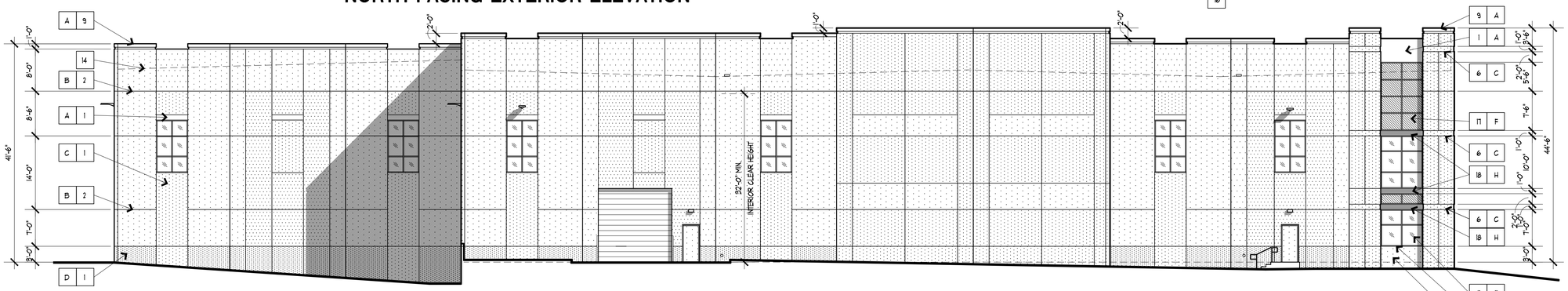

WEST FACING EXTERIOR ELEVATION

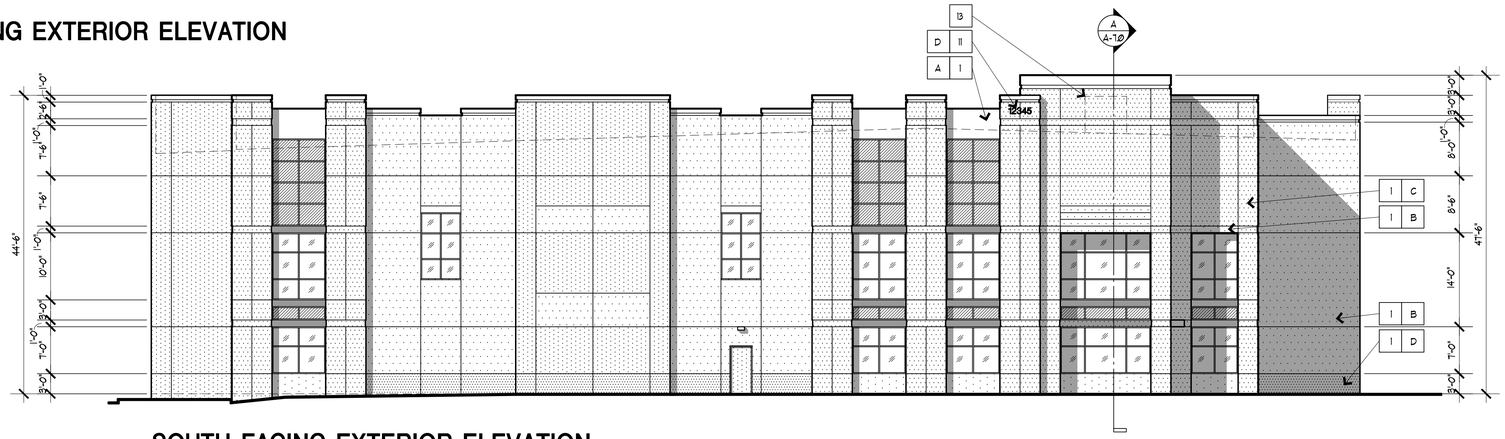

SOUTH FACING EXTERIOR ELEVATION

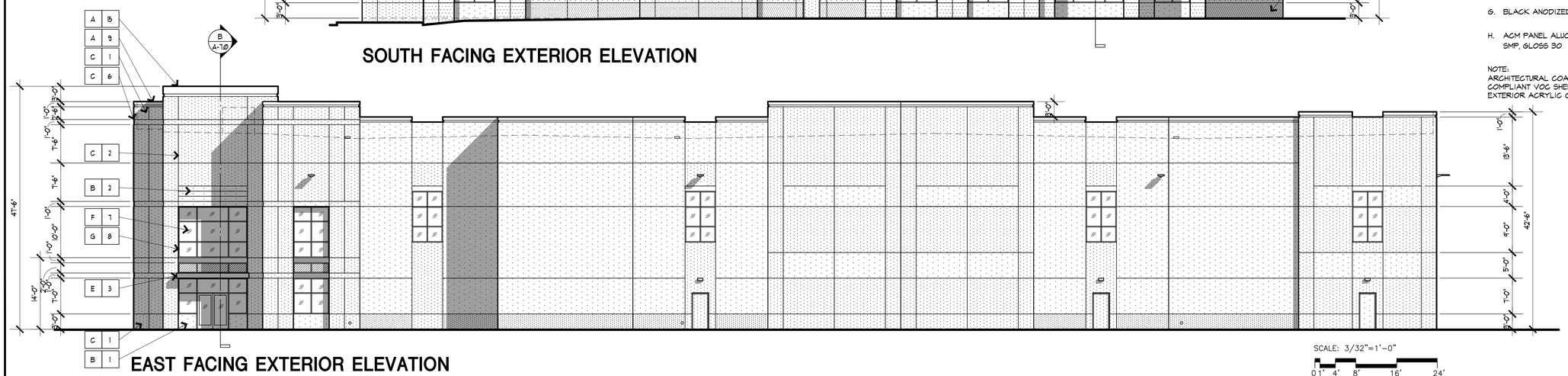

EAST FACING EXTERIOR ELEVATION

SCALE: 3/32"=1'-0"

0 1' 4' 8' 16' 24'

ELEVATION NOTES

1. CONCRETE PANEL
2. 3" REVEAL
3. STEEL CANOPY
4. VANDAL RESISTANT WALL MOUNTED LIGHT FIXTURE
5. METAL DOOR
6. 12" CONCRETE REVEAL
7. VISION GLASS
8. ALUMINUM MULLION
9. CONCRETE CORNICE SEE 11B/A-1.2
10. WALL MOUNTED LIGHT FIXTURE
11. ILLUMINATED ADDRESS NUMBERS 12" HIGH WITH 1" STROKE IN COLOR CONTRASTING WITH BACKGROUND
12. ROLL UP DOOR
13. ROOF MOUNTED HVAC UNIT, SCREENED BY PARAPET
14. ROOF LINE BEHIND PARAPET
15. CONCRETE CORNICE, SEE 11A/A-1.2
16. DOCK LEVELER
17. SPANDREL GLASS
18. ACM PANEL

ELEVATION FINISHES

A. LIGHT PAINT COLOR: SHERWIN WILLIAMS NATURAL WHITE SW 9542

B. MEDIUM LIGHT PAINT COLOR: SHERWIN WILLIAMS GUILD GREY SW 9561

C. MEDIUM PAINT COLOR: SHERWIN WILLIAMS BEDROCK SW 9563

D. DARK PAINT COLOR: SHERWIN WILLIAMS BEFORE THE STORM SW 9564

E. SHERWIN WILLIAMS NIGHT WATCH SW 9680

F. GLASS: VITRO SOLARBAN 70XL (2) SOLARBLUE + CLEAR VLT: 42%, U-VALUE: 0.28, SHGC 0.23

G. BLACK ANODIZED ALUMINUM

H. ACM PANEL ALUCOBOND TRI-CORN BLACK SMP, GLOSS 30

NOTE:
ARCHITECTURAL COATINGS (PAINT) SHALL BE SUPER COMPLIANT VOC SHERWIN WILLIAMS EMERALD EXTERIOR ACRYLIC OR EQUAL

C.VANDERHOEK
ARCHITECTS
4109 E. Fernwood Ave
Orange, CA 92869
Tel: 714-308-7662

HILTON INDUSTRIAL FACILITY

HILTON DRIVE
FONTANA, CA

MASTER CASE NO. 18-053 TPM NO. 18-005 DESIGN REVIEW NO. 18-010

EXTERIOR ELEVATIONS BUILDING-1

REVISION:

DATE MARCH 17, 2025

JOB NO: 21088
SHEET:

A-5.1

. OF .. SHEETS

© 2025 C. VanDerHoek Architects, Inc. expressly reserves its common law copyright and other property rights in these plans. These plans are not to be reproduced, changed or copied in any form or manner whatsoever, nor are they to be assigned to any third party, without first obtaining the written permission and consent of C. VanDerHoek Architects, Inc.

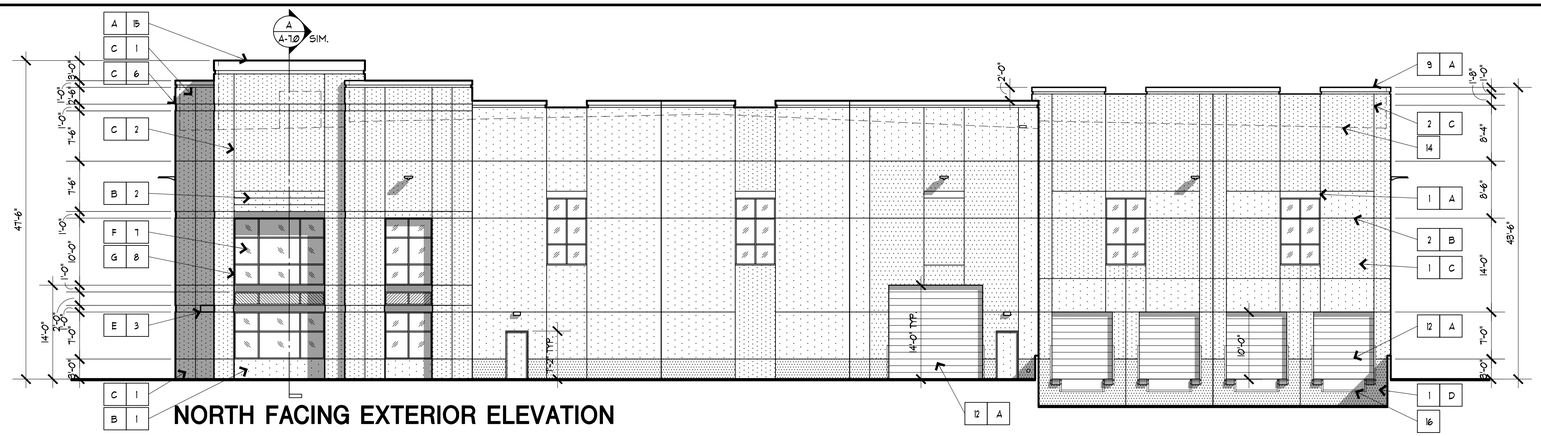

NORTH FACING EXTERIOR ELEVATION

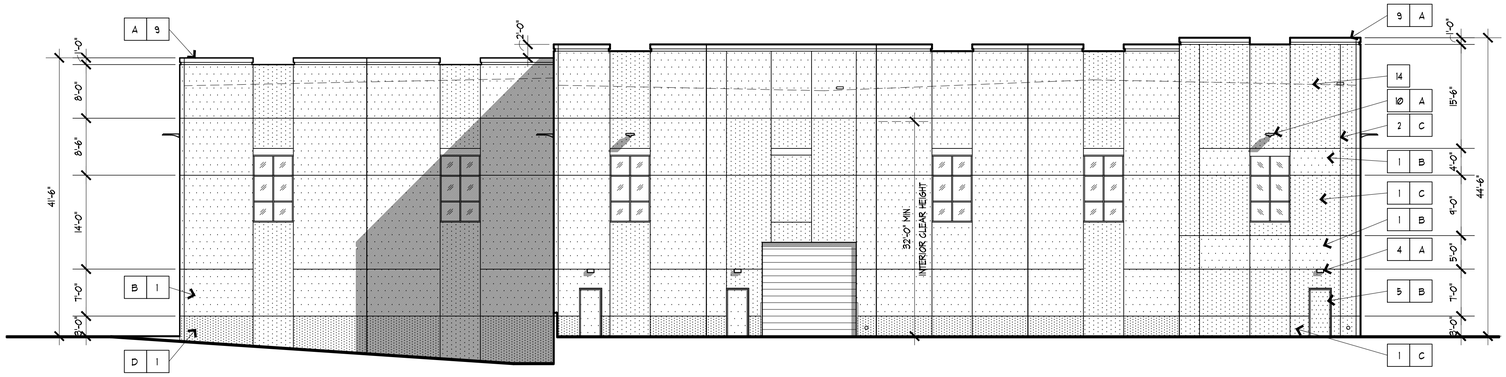

WEST FACING EXTERIOR ELEVATION

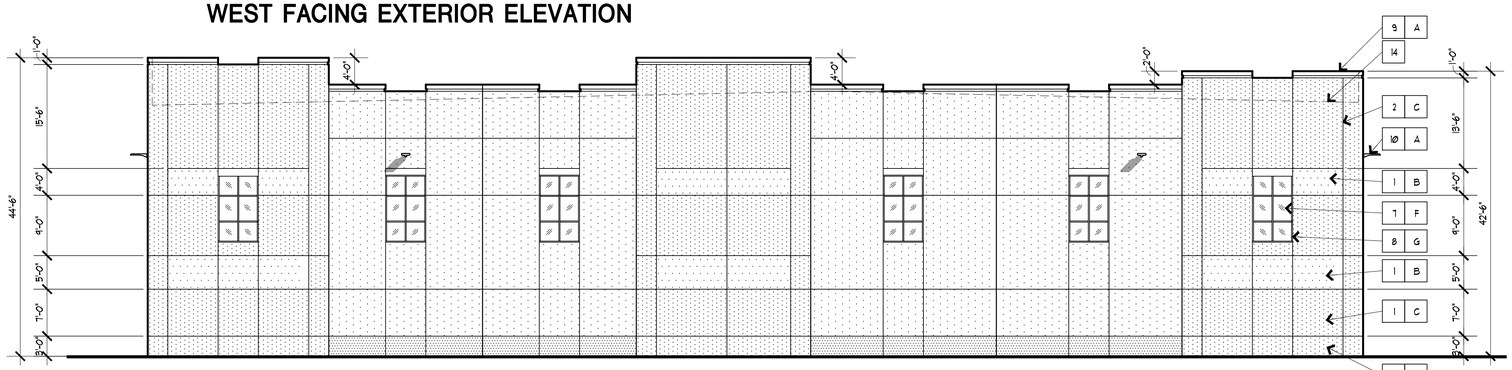

SOUTH FACING EXTERIOR ELEVATION

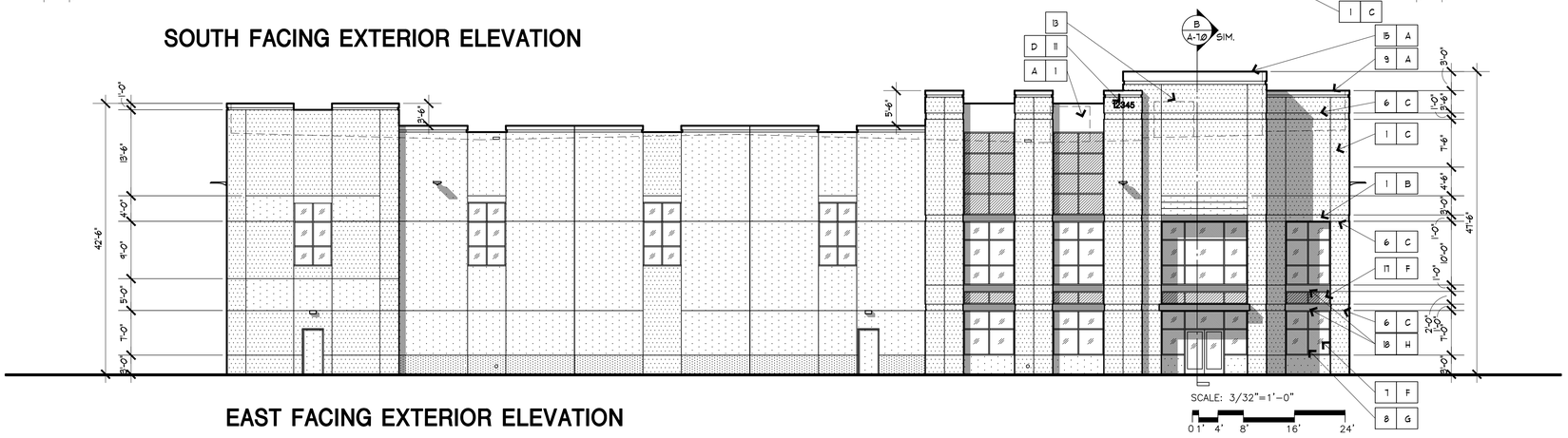

EAST FACING EXTERIOR ELEVATION

ELEVATION NOTES

1. CONCRETE PANEL
2. 3" REVEAL
3. STEEL CANOPY
4. VANDAL RESISTANT WALL MOUNTED LIGHT FIXTURE
5. METAL DOOR
6. 12" CONCRETE REVEAL
7. VISION GLASS
8. ALUMINUM MULLION
9. CONCRETE CORNICE, SEE 11B/A-1.2
10. WALL MOUNTED LIGHT FIXTURE
11. ILLUMINATED ADDRESS NUMBERS 12" HIGH WITH 1" STROKE IN COLOR CONTRASTING WITH BACKGROUND
12. ROLL UP DOOR
13. ROOF MOUNTED HVAC UNIT, SCREENED BY PARAPET
14. ROOF LINE BEHIND PARAPET
15. CONCRETE CORNICE, SEE 11A/A-1.2
16. DOCK LEVELER
17. SPANDREL GLASS
18. ACM PANEL

ELEVATION FINISHES

A. LIGHT PAINT COLOR: SHERWIN WILLIAMS NATURAL WHITE SW 9542

B. MEDIUM LIGHT PAINT COLOR: SHERWIN WILLIAMS GUILD GREY SW 9561

C. MEDIUM PAINT COLOR: SHERWIN WILLIAMS BEDROCK SW 9563

D. DARK PAINT COLOR: SHERWIN WILLIAMS BEFORE THE STORM SW 9564

E. SHERWIN WILLIAMS NIGHT WATCH SW 9680

F. GLASS: VITRO SOLARBAN 70XL (2) SOLARBLUE + CLEAR VLT: 42%, U-VALUE: 0.28, SHGC 0.23

G. BLACK ANODIZED ALUMINUM

H. ACM PANEL ALUCOBOND TRI-CORN BLACK SMP, GLOSS 30

NOTE:
ARCHITECTURAL COATINGS (PAINT) SHALL BE SUPER COMPLIANT VOC SHERWIN WILLIAMS EMERALD EXTERIOR ACRYLIC OR EQUAL

C.VANDERHOEK
ARCHITECTS
4109 E. Fernwood Ave
Orange, CA 92869
Tel: 714-308-7662

HILTON INDUSTRIAL FACILITY
.
HILTON DRIVE
FONTANA, CA
MASTER CASE NO. 18-053 TPM NO. 18-005 DESIGN REVIEW NO. 18-010

EXTERIOR ELEVATIONS BUILDING-2

REVISION:

DATE MARCH 17, 2025

JOB NO: 21088
SHEET:

A-5.2

. OF .. SHEETS

© 2025 C. VanDerHoek Architects, Inc. expressly reserves its common law copyright and other property rights in these plans. These plans are not to be reproduced, changed or copied in any form or manner whatsoever, nor are they to be assigned to any third party, without first obtaining the written permission and consent of C. VanDerHoek Architects, Inc.

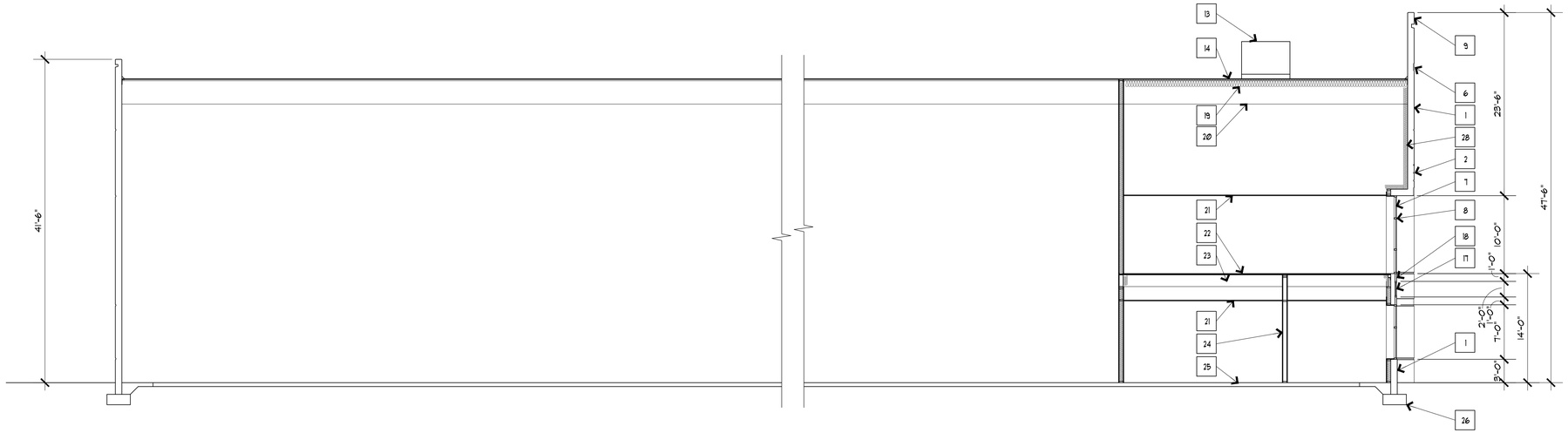

BUILDING SECTION-AA

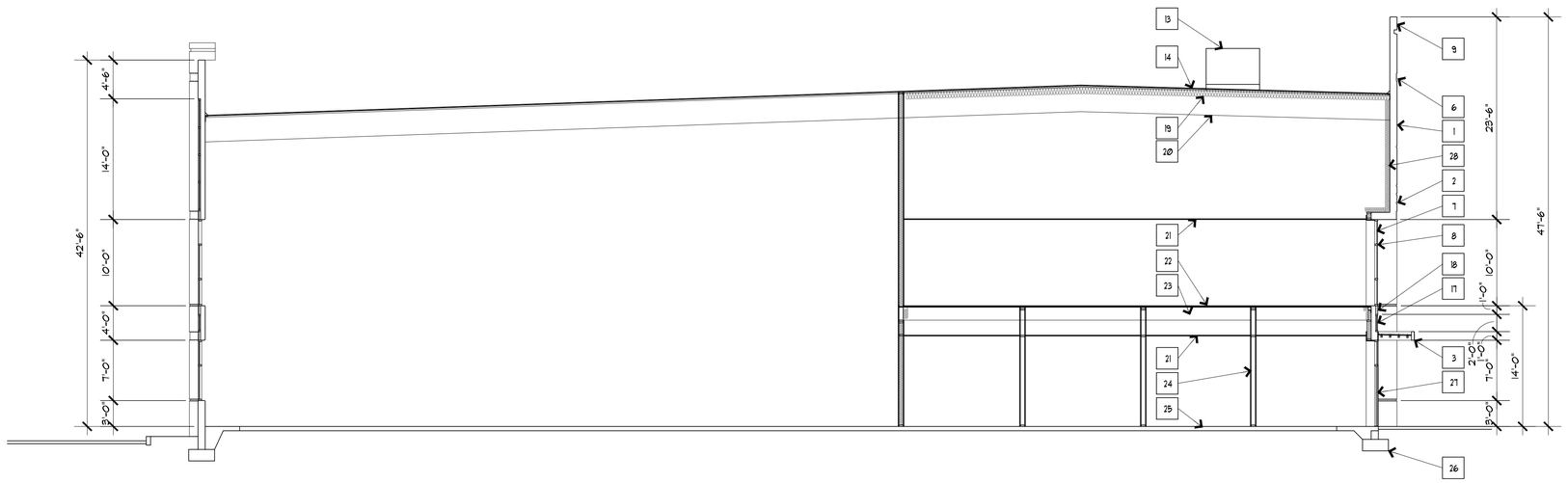

BUILDING SECTION-BB

SCALE: 1/8"=1'-0"

0 1' 4' 8' 12' 20'

SECTION NOTES

1. CONCRETE PANEL
2. 3" REVEAL
3. STEEL CANOPY
4. VANDAL RESISTANT WALL MOUNTED LIGHT FIXTURE
5. METAL DOOR
6. 12" CONCRETE REVEAL
7. VISION GLASS
8. ALUMINUM MULLION
9. CONCRETE CORNICE, SEE 11A/A-1.2
10. WALL MOUNTED LIGHT FIXTURE
11. ILLUMINATED ADDRESS NUMBERS 12" HIGH WITH 1" STROKE IN COLOR CONTRASTING WITH BACKGROUND
12. ROLL UP DOOR
13. ROOF MOUNTED HVAC UNIT, SCREENED BY PARAPET
14. ROOF MEMBRANE
15. LIGHT FIXTURE
16. DOCK LEVELER
17. SPANDREL GLASS
18. ACM PANEL
19. ROOF INSULATION
20. ROOF FRAMING
21. SUSPENDED ACOUSTICAL CEILING
22. 1 1/2" GYPCRETE OVER PLYWOOD SUBFLOOR
23. FLOOR FRAMING
24. INTERIOR PARTITION WALL
25. CONCRETE SLAB
26. CONCRETE FOOTING
27. DOOR
28. WALL INSULATION

C.VANDERHOEK
ARCHITECTS
4109 E. Fernwood Ave
Orange, CA 92869
Tel: 714-308-7662

HILTON INDUSTRIAL FACILITY

HILTON DRIVE
FONTANA, CA

MASTER CASE NO. 18-053 TPM NO. 18-005 DESIGN REVIEW NO. 18-010

SECTIONS

REVISION:

DATE MARCH 17, 2025

JOB NO: 21088
SHEET:

A-7.0

. OF .. SHEETS

© 2025 C. VanDerHoek Architects, Inc. expressly reserves its common law copyright and other property rights in these plans. These plans are not to be reproduced, changed or copied in any form or manner whatsoever, nor are they to be assigned to any third party, without first obtaining the written permission and consent of C. VanDerHoek Architects, Inc.

CITY OF FONTANA INDUSTRIAL SUSTAINABILITY NOTES

(3) Anti-idling signs indicating a 3-minute diesel truck engine idling restriction shall be posted at industrial commerce facilities along entrances to the site and in the dock areas and shall be strictly enforced by the facility operator.

(4) Prior to issuance of certificate of occupancy facility operators shall establish and submit for approval to the Planning Director a Truck Routing Plan to and from the State Highway System based on the City's latest Truck Route Map. The plan shall describe the operational characteristics of the use of the facility operator, including, but not limited to, hours of operations, types of items to be stored within the building, and proposed truck routing to and from the facility to designated truck routes that avoids passing sensitive receptors, to the greatest extent possible. The plan shall include measures, such as signage and pavement markings, queuing analysis and enforcement, for preventing truck queuing, circling, stopping, and parking on public streets. Facility operator shall be responsible for enforcement of the plan. A revised plan shall be submitted to by the Planning Director prior to a business license being issued by the City for any new tenant of the property. The Planning Director shall have discretion to determine if changes to the plan are necessary including any additional measures to alleviate truck routing and parking issues that may arise during the life of the facility.

(5) Signs and drive aisle pavement markings shall clearly identify the on site circulation pattern to minimize unnecessary on-site vehicular travel.

(6) Facility operators shall post signs in prominent locations inside and outside of the building indicating that off-site parking for any employee, truck, or other operation related vehicle is strictly prohibited. City may require facility operator to post signs on surface or residential streets indicating that off-site truck parking is prohibited by City ordinance and/or the Truck Routing Plan.

(7) Signs shall be installed at all truck exit driveways directing truck drivers to the truck route as indicated in the Truck Routing Plan and State Highway System.

(8) Signs shall be installed in public view with contact information for a local designated representative who works for the facility operator and who is designated to receive complaints about excessive dust, fumes, or odors, and truck and parking complaints for the site, as well as contact information for the SCAQMD's on-line complaint system and its complaint call-line: 1-800-288-7664. Any complaints made to the facility operator's designee shall be answered within 72 hours of receipt.

(9) All signs under this Section shall be legible, durable, and weather-proof.

(1) On-site motorized operational equipment shall be ZE (zero emission).

(6) Unless the owner of the facility records a covenant on the title of the underlying property ensuring that the property cannot be used to provide chilled, cooled, or freezer warehouse space, a conduit shall be installed during construction of the building shell from the electrical room to 100%of the loading dock doors that have potential to serve the refrigerated space. When tenant improvement building permits are issued for any refrigerated warehouse space, electric plug-in units shall be installed at every dock door servicing the refrigerated space to allow transport refrigeration units (TRUs) to plug in. Truck operators with TRUs shall be required to utilize electric plug-in units when at loading docks.

(3) Use of super-compliant VOC architectural and industrial maintenance coatings (e.g., paints) shall be required.
(4) The facility operator shall incorporate a recycling program.
(5) The following environmentally responsible practices shall be required during construction:

a. The applicant shall use reasonable best efforts to deploy the highest rated GARB Tier technology that is available at the time of construction. Prior to permit issuance, the construction contractor shall submit an equipment list confirming equipment used is compliant with the highest GARB Tier at the time of construction. Equipment proposed for use that does not meet the highest GARB Tier in effect at the time of construction, shall only be approved for use at the discretion of the Planning Director and shall require proof from the construction contractor that, despite reasonable best efforts to obtain the highest GARB Tier equipment, such equipment was unavailable.
b. Use of electric-powered hand tools, forklifts, and pressure washers.
c. Designation of an area in any construction site where electric powered construction vehicles and equipment can charge.
d. Identification in site plans of a location for future electric truck charging stations and installation of a conduit to that location.
e. Diesel-powered generators shall be prohibited except in case of emergency or to establish temporary power during construction.

(6) A Property Maintenance Program shall be submitted for review and approval by the Planning Director or his/her designee prior to the issuance of building permits. The program shall provide for the regular maintenance of building structures, landscaping, and paved surfaces in good physically condition, and appearance. The methods and maximum intervals for maintenance of each component shall be specified in the program.
(7) Property owner shall provide facility operator with information Incentive programs such as the Carl Moyer Program and Voucher Incentive Program and shall require all facility operators to enroll in the United States Environmental Protection Agency's SmartWay Program.

C.VANDERHOEK
ARCHITECTS
4109 E. Fernwood Ave
Orange, CA 92869
Tel: 714-308-7662

HILTON INDUSTRIAL FACILITY
.
HILTON DRIVE
FONTANA, CA
MASTER CASE NO. 18-053 TPM NO. 18-005 DESIGN REVIEW NO. 18-010

GENERAL NOTES

REVISION:

DATE MARCH 17, 2025

JOB NO: 21088
SHEET:

SP-1
OF .. SHEETS

© 2025 C. VanDerHoek Architects, Inc. expressly reserves its common law copyright and other property rights in these plans. These plans are not to be reproduced, changed or copied in any form or manner whatsoever, nor are they to be assigned to any third party, without first obtaining the written permission and consent of C. VanDerHoek Architects, Inc.

NORTH FACING EXTERIOR ELEVATION

WEST FACING EXTERIOR ELEVATION

SOUTH FACING EXTERIOR ELEVATION

EAST FACING EXTERIOR ELEVATION

C.VANDERHOEK
ARCHITECTS

3/17/25

0 1' 4' 8' 16' 24'

HILTON INDUSTRIAL
BUILDING-1
FONTANA, CA
JOB NO. 21088

ELEVATION FINISHES

LIGHT PAINT COLOR: SHERWIN WILLIAMS NATURAL WHITE SW 9542

MEDIUM LIGHT PAINT COLOR: SHERWIN WILLIAMS GUILD GREY SW 9561

MEDIUM PAINT COLOR: SHERWIN WILLIAMS BEDROCK SW 9563

DARK PAINT COLOR: SHERWIN WILLIAMS BEFORE THE STORM SW 9564

SHERWIN WILLIAMS NIGHT WATCH SW 9680

GLASS: VITRO SOLARBAN 70XL (2) SOLARBLUE + CLEAR VLT: 42%, U-VALUE: 0.28, SHGC 0.23

BLACK ANODIZED ALUMINUM

ACM PANEL ALUCOBOND TRI-CORN BLACK SMP, GLOSS 30

C.VANDERHOEK
ARCHITECTS

3/17/25

HILTON INDUSTRIAL
BUILDING-2
FONTANA, CA
JOB NO. 21088

ELEVATION FINISHES

LIGHT PAINT COLOR: SHERWIN WILLIAMS NATURAL WHITE SW 9542

MEDIUM LIGHT PAINT COLOR: SHERWIN WILLIAMS GUIILD GREY SW 9561

MEDIUM PAINT COLOR: SHERWIN WILLIAMS BEDROCK SW 9563

DARK PAINT COLOR: SHERWIN WILLIAMS BEFORE THE STORM SW 9564

SHERWIN WILLIAMS NIGHT WATCH SW 9680

GLASS: VITRO SOLARBAN 70XL (2) SOLARBLUE + CLEAR VLT: 42%, U-VALUE: 0.28, SHGC 0.23

BLACK ANODIZED ALUMINUM

ACM PANEL ALUCOBOND TRI-CORN BLACK SMP, GLOSS 30

PARKING LOT SHADING CALCULATIONS

TOTAL PARKING LOT AREA	=	16,714 SQ. FT.
TOTAL SHADE AREA REQUIRED WITHIN 15 YRS.	=	5,014 SQ. FT.
TOTAL PROJECTED SHADE AREA WITHIN 15 YRS.	=	5,140 SQ. FT.

PER MUNICIPAL CODE SECTION NO. 9-71(e)
30% OF PARKING STALL AREAS TO BE SHADED WITHIN 15 YEARS AFTER PLANTING

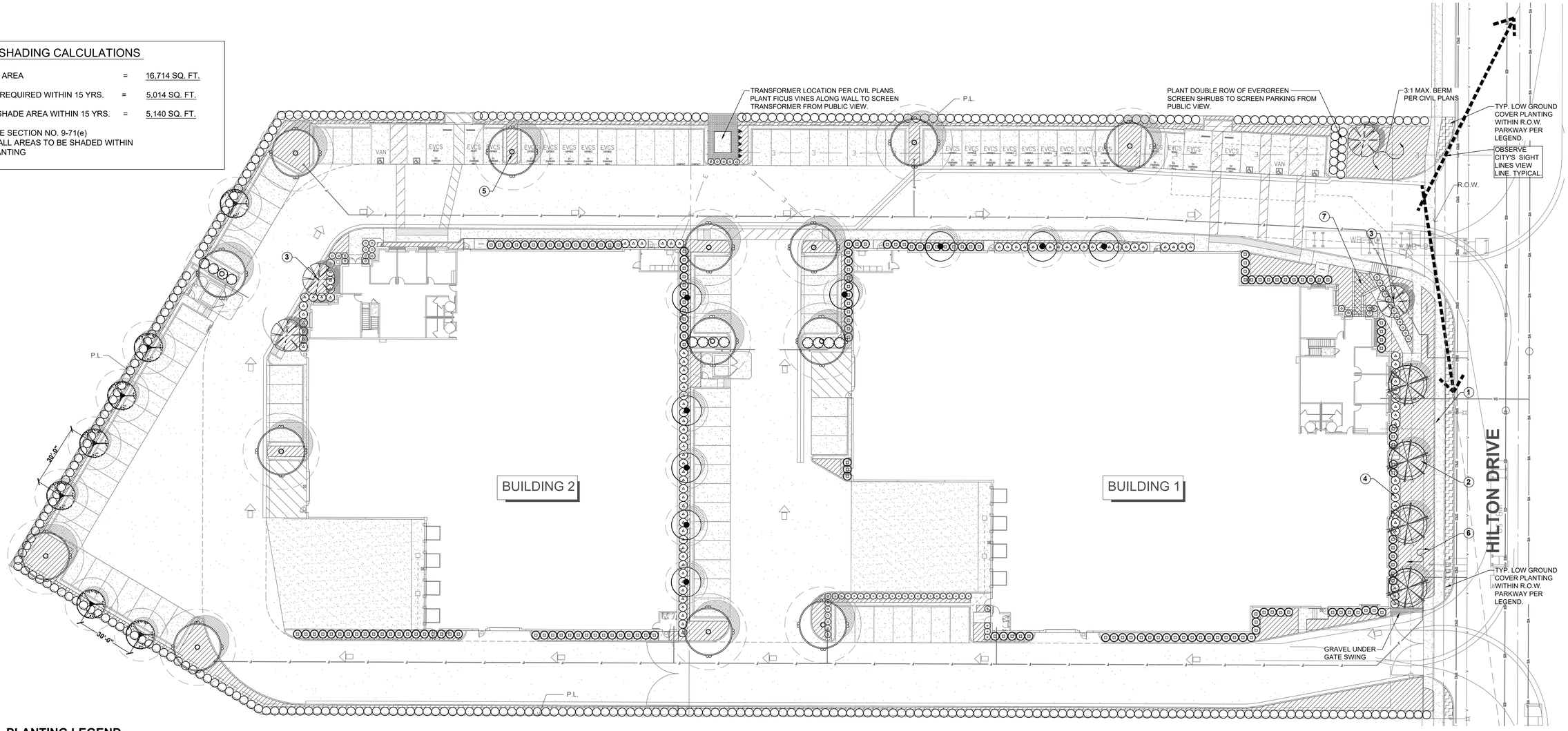

PLANTING LEGEND

TREES

SYMBOL	TREE NAME	QTY.	WUCOLS
	*NEW STREET TREE ALONG HILTON DRIVE PODOCARPUS GRACILIOR, FERN PINE 24" BOX SIZE.	4	L
	SMALL ACCENT TREE LAGERSTROEMIA I. 'WATERMELON RED', CRAPE MYRTLE 24" BOX SIZE.	4	L
	NEW PARKING LOT SHADE TREE ULMUS PARVIFOLIA 'TRUE GREEN', EVERGREEN ELM 24" BOX SIZE.	14	L
	VERTICAL TREE ALONG BUILDING/ SECONDARY PARKING LOT TREE TRISTANIA LAURINA, WATER GUM TREE 15 GAL. SIZE. ALT: PODOCARPUS GRACILIOR, FERN PINE	9	L
	EVERGREEN SCREEN TREE PINUS ELDARICA, MONDELL PINE 36" BOX SIZE.	7	L

TOTAL # OF TREES = 38 TREES

*NOTE: PROPOSED STREET TREES SHALL BE CONSISTANT WITH EXISTING TREES ALONG HILTON DR. TO BE CONFIRMED IN THE FIELD.

VINE

SYMBOL	VINE NAME	QTY.	WUCOLS
▶	FICUS PUMILA, CREEPING FIG 5 GAL. SIZE @ 3'-0" O.C.	5	L

	SHRUBS SHRUBS SHALL BE CHOSEN FROM THE FOLLOWING LIST:	WUCOLS
	XYLOSMA CONGESTUM, SHINY LEAF XYLOSMA 5 GAL. SIZE	L
	LEUCOPHYLLUM FRUTESCENS, TEXAS RANGER 5 GAL. SIZE	L
	WESTRINGIA FRUTICOSA, COAST ROSEMARY 5 GAL. SIZE	L
	ROSMARINUS 'TUSCAN BLUE', TUSCAN BLUE ROSEMARY 5 GAL. SIZE	L
	BUXUS JAPONICA, JAPANESE BOXWOOD 5 GAL. SIZE	L

	GROUND COVER/SHRUB MASSES GROUND COVER AND SHRUB MASSES SHALL BE CHOSEN FROM THE FOLLOWING LIST:	WUCOLS
	SENECIO MANDRALISCAE, BLUE CHALKSTICKS 1 GAL. SIZE @ 24" O.C.	L
	ROSMARINUS O. 'PROSTRATUS', CREEPING ROSEMARY 1 GAL. SIZE @ 30" O.C.	L
	SALVIA GREGGII, AUTUMN SAGE 1 GAL. SIZE @ 36" O.C.	L
	MUHLENBERGIA RIGENS, DEER GRASS 1 GAL. SIZE @ 42" O.C.	L
	BACCHARIS PILULARIS, COYOTE BUSH 1 GAL. SIZE @ 42" O.C.	L
	TYP. LOW GROUND COVER PLANTING WITH PUBLIC R.O.W. (PARKWAY) SUGGEST LANTANA DWARF YELLOW.	L

DESIGN KEY NOTES:

1. NEW SIDEWALK PER CIVIL DWGS.
2. NEW STREET TREE ALONG HILTON DRIVE (MATCH EXISTING)
3. SMALL ACCENT TREE AT PROJECT FOCAL AREAS PER LEGEND
4. TYP. FOUNDATION SHRUB PER LEGEND
5. BROAD CANOPY PARKING LOT SHADE TREE PER LEGEND
6. DROUGHT TOLERANT GROUND COVER AND SHRUB PLANTING PER LEGEND
7. ENHANCED PAVING AT BUILDING ENTRY. INTEGRAL COLORED CONC.

CONCEPTUAL PLAN NOTE:

THIS IS A CONCEPTUAL LANDSCAPE PLAN. IT IS BASED ON PRELIMINARY INFORMATION WHICH IS NOT FULLY VERIFIED AND MAY BE INCOMPLETE. IT IS MEANT AS A COMPARATIVE AID IN EXAMINING ALTERNATE DEVELOPMENT STRATEGIES AND ANY QUANTITIES INDICATED ARE SUBJECT TO REVISION AS MORE RELIABLE INFORMATION BECOMES AVAILABLE.

IRRIGATION NOTE:

THE PROJECT WILL BE EQUIPPED WITH A LOW FLOW IRRIGATION SYSTEM CONSISTING OF ET WEATHER BASED SMART CONTROLLER, LOW FLOW ROTORS, BUBBLER AND/ OR DRIP SYSTEMS USED THROUGHOUT. THE IRRIGATION WATER EFFICIENCY WILL MEET OR SURPASS THE CURRENT STATE MANDATED AB-1881 WATER ORDINANCE. PER MUNICIPAL CODE SECTION NO. 9-71(d) ALL LANDSCAPING AREAS WILL BE PROPERLY IRRIGATED FOR THE LIFE OF THE FACILITY TO ALLOW FOR PLANTS AND TREES TO MAINTAIN GROWTH.

PLANTING NOTE:

PER MUNICIPAL CODE SECTION NO. 9-71(c) ALL LANDSCAPING WILL BE DROUGHT TOLERANT, AND TO THE EXTENT FEASIBLE, SPECIES WITH LOW BIOGENIC EMISSIONS. PALM TREES WILL NOT BE UTILIZED.

GENERAL NOTES:

- SLOPES GREATER THAN 3:1 SHALL BE STABILIZED WITH EROSION CONTROL GROUND COVER PER LEGEND, AND MULCH MATERIAL WITH 'BINDER' MATERIAL SHALL BE APPLIED FOR EROSION CONTROL.
- ROCK RIP-RAP MATERIAL SHALL BE INSTALLED WHERE DRAIN LINES CONNECT TO INFILTRATION AREAS.
- ALL UTILITY EQUIPMENT SUCH AS BACKFLOW UNITS, TRANSFORMERS, FIRE DETECTOR CHECKS AND FIRE CHECK VALVES WILL BE SCREENED WITH EVERGREEN PLANT MATERIAL ONCE FINAL LOCATIONS HAVE BEEN DETERMINED.

PRELIMINARY WATER USE CALCULATIONS

ETO FOR FONTANA AREA = 55.6

MAWA (210,969 GALLONS) = 55.6 X 0.62 X 0.45 X 19,560
MAWA (ANNUAL GALLONS ALLOWED) =ETO X 0.62 X ETAF X AREA

AVERAGE DAILY IRRIGATION WATER USE = 303,423

LANDSCAPE DATA

TOTAL LANDSCAPE AREA = 19,560 SQ. FT.

REQUIRED TREE QUANTITY MATRIX

- TOTAL NUMBER OF PARKING STALLS = 104 STALLS
- TOTAL NUMBER OF TREES REQUIRED AT 1 TREE PER 4 STALLS 106 / 4 = 26 TREES
- TOTAL NUMBER OF TREES PROVIDED = 27 TREES

WUCOLS PLANT FACTOR

THIS PROJECT IS LOCATED IN 'WUCOLS' REGION '4-SOUTH INLAND VALLEY'.

H = HIGH WATER NEEDS
M = MODERATE WATER NEEDS
L = LOW WATER NEEDS
VL= VERY LOW WATER NEEDS

BASED UPON PROJECT TREE INVENTORY CONDUCTED BY CITY'S CERTIFIED ARBORIST, THE TALLY OF REPLACEMENT TREES REQUIRED PURSUANT TO FONTANA MUNICIPAL CODE CHAPTER 28, ARTICLE III, SECTION 28-67 IS **THIRTY-EIGHT 15-GALLON CONTAINER TREES.**

NUMBER OF 15-GALLON TREES PROVIDED ON-SITE = 38 TREES.

RODARTE LANDSCAPE ARCHITECTURE

CONCEPTUAL LANDSCAPE PLAN
HILTON INDUSTRIAL FACILITY

FONTANA, CA

NORTH

0' 20' 40' 60' 80'
SCALE: 1" = 20'-0"

FEBRUARY 12, 2025

L-1

HILTON LANE, LLC
P.O. BOX 54903
IRVINE, CA 92619
CONTACT: DOUG MCCAN

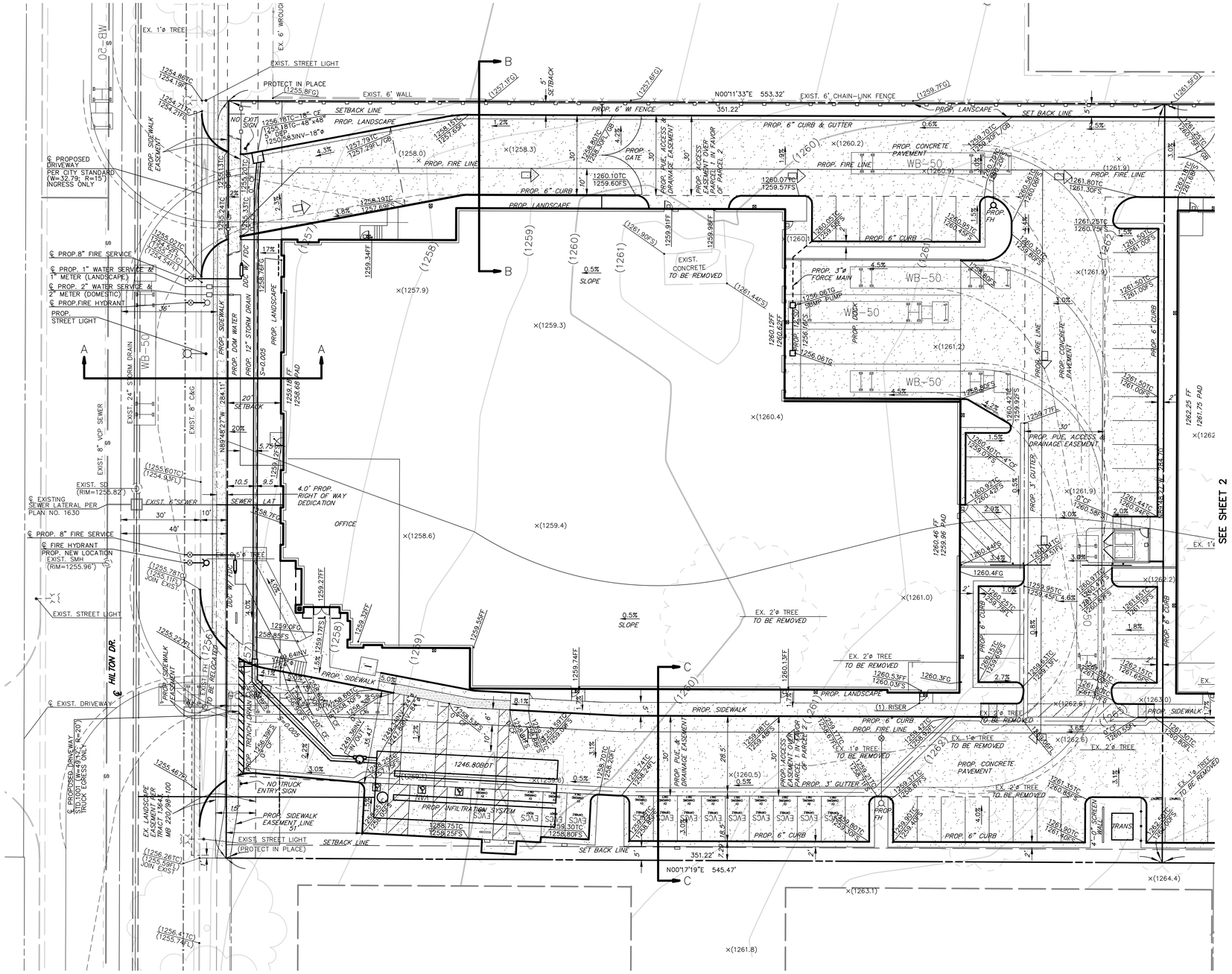

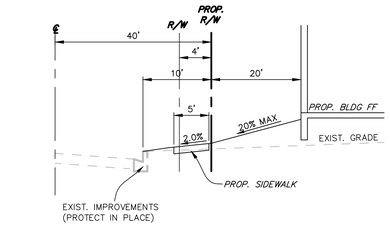

SECTION A–A
NTS

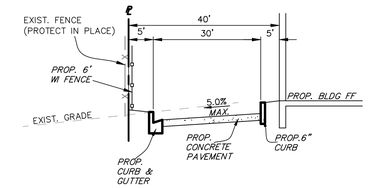

SECTION B–B
NTS

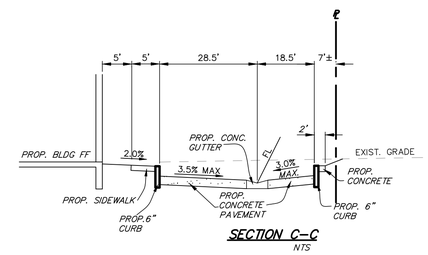

SECTION C–C
NTS

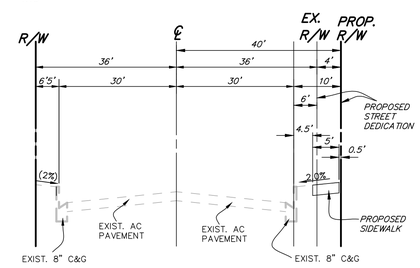

TYPICAL SECTION
HILTON DRIVE N.T.S.

LEGEND

BW	BACK OF WALK
EG	EXISTING GRADE
FG	FINISH GRADE
FS	FINISH SURFACE
TC	TOP OF CURB
FL	FLOW LINE
EP	EDGE OF PAVEMENT
FF	FINISH FLOOR
PAD	PAD GRADE
TW	TOP OF WALL
TF	TOP OF FOOTING
HP	HIGH POINT
LP	LOW POINT
CF	CURB FACE
TG	TOP OF GRATE
TRW	TOP OF RETAINING WALL
EDF	EXTRA DEPTH FOOTING
INV	INVERT OF PIPE
	TOP OF SLOPE
	RATE OF SLOPE
	TOE OF SLOPE
	EXISTING SEWER
	EXISTING WATER
	EXISTING FIRE HYDRANT
	EXISTING FDC
	EXISTING WATER VALVE
	EXISTING GAS METER
	EXISTING WATER METER
	EXISTING PULL BOX
	EXISTING ICV
	EXISTING STREET LIGHT
	EXISTING CONTOUR
	FINISH CONTOURS
	DAYLIGHT LINE
	REMOVAL
	EXIST. CONCRETE
	CONCRETE
	ASPHALT PAVING
	OVERLAY

LEGAL DESCRIPTION:

THE LAND REFERRED TO IN THIS COMMITMENT IS SITUATED IN THE CITY OF FONTANA, COUNTY OF SAN BERNARDINO, STATE OF CALIFORNIA, AND IS DESCRIBED AS FOLLOWS:

LOT 2, TRACT NO. 13643, IN THE CITY OF FONTANA, COUNTY OF SAN BERNARDINO, AS PER MAP RECORDED IN BOOK 220 OF MAPS, PAGE(S) 98, 99 AND 100, IN THE OFFICE OF THE COUNTY RECORDER OF SAID COUNTY, AS AMENDED BY CERTIFICATE OF CORRECTION, RECORDED AUGUST 9,1991, AS INSTRUMENT NO. 91–303293, OFFICIAL RECORDS.

APN(s): 1110–151–03–0–000

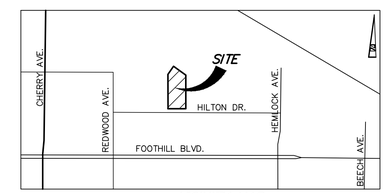

VICINITY MAP
NOT TO SCALE

SCALE: 1"=20'

LAND DEVELOPMENT DESIGN COMPANY, LLC
2313 E. Philadelphia St., Ste. F
Ontario, CA 91761
(909) 930–1466 • FAX (909) 930–1468
PLANNING • CIVIL • SURVEYING

REGISTERED PROFESSIONAL ENGINEER
KEVIN J. RICHER
No. 43714
Exp. 3/31/2027
CIVIL
STATE OF CALIFORNIA

BENCHMARK

REVISIONS:

PREPARED UNDER THE SUPERVISION OF:
KEVIN J. RICHER
R.C.E. 43714 LIC. EXP. 3/31/27 — DATE 9/29/2025

APPROVED BY: — DATE

PRELIMINARY GRADING PLAN

SITE LOCATION:
LOT 2 TR. 13643
HILTON DR.
FONTANA, CA 92336

PREPARED FOR:
GEORGE & DOUGH MCCAN
15 ORION
IRVINE, CA 92603

DATE: 9/29/2025	JOB NO. 4113
DRAWN BY: RAS	SCALE 1"=20'
DESIGNED BY: KJR	SHEET 1 OF 3 SHEETS
CHECKED BY: KJR	

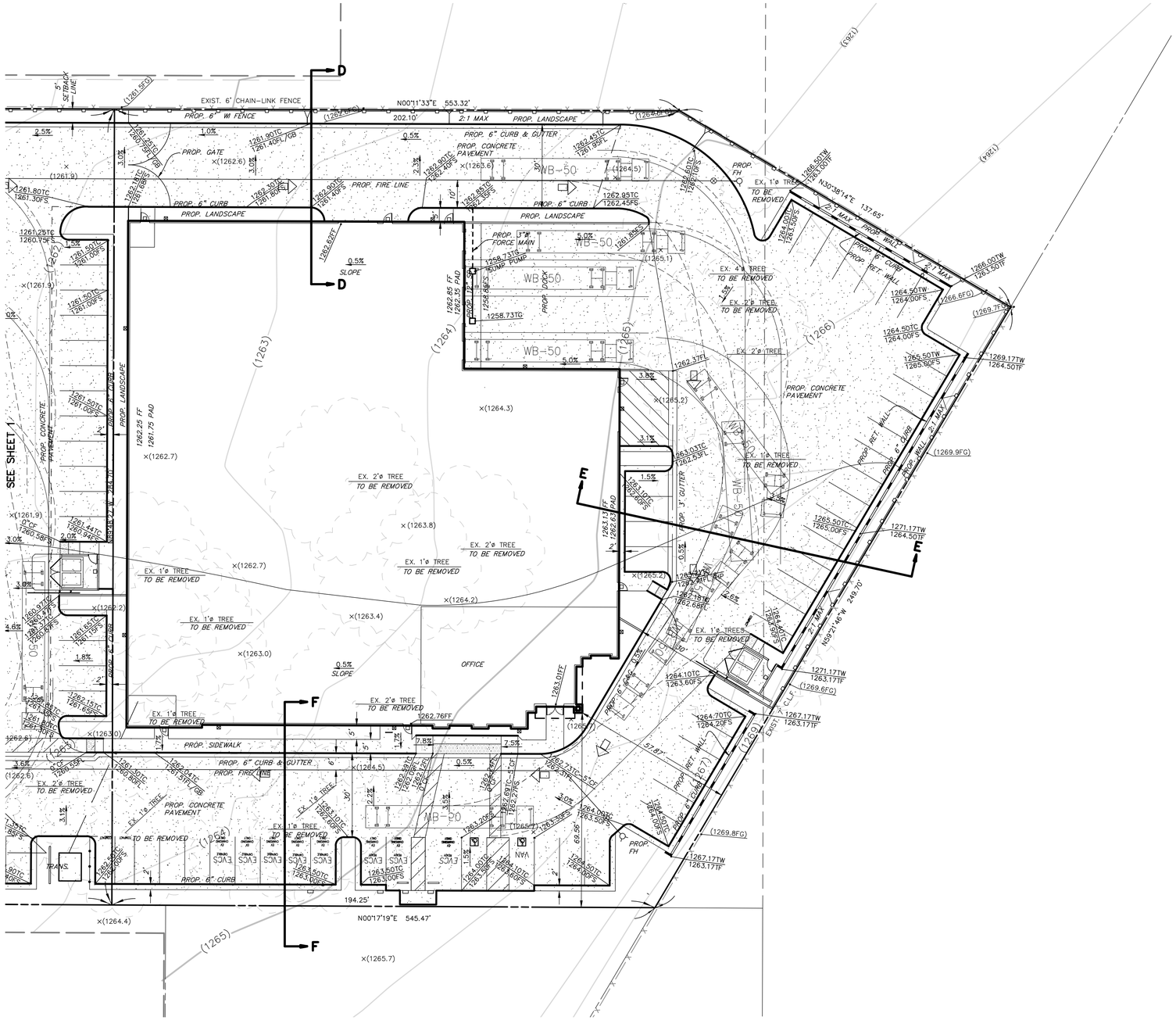

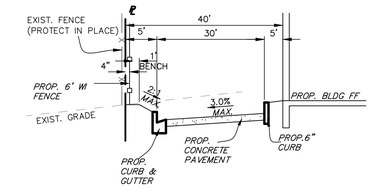

SECTION D–D
NTS

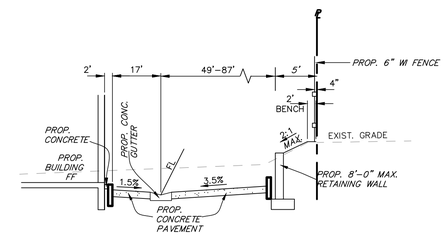

SECTION E–E
NTS

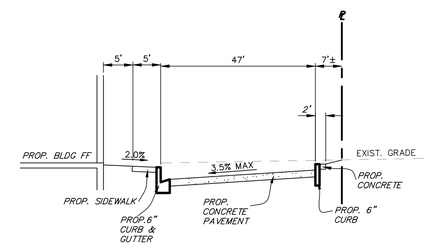

SECTION F–F
NTS

20 0 20 40 60
SCALE: 1"=20'

LAND DEVELOPMENT DESIGN COMPANY, LLC
2313 E. Philadelphia St., Ste. F
Ontario, CA 91761
(909) 930-1466 • FAX (909) 930-1468
PLANNING • CIVIL • SURVEYING

REGISTERED PROFESSIONAL ENGINEER
KEVIN J. RICHER
No. 43714
Exp. 3/31/2027
CIVIL
STATE OF CALIFORNIA

BENCHMARK

REVISIONS:

PREPARED UNDER THE SUPERVISION OF:
KEVIN J. RICHER
R.C.E. 43714 LIC. EXP. 3/31/27
9/29/2025
DATE

APPROVED BY:
DATE

PRELIMINARY GRADING PLAN

SITE LOCATION:
LOT 2 TR. 13643
HILTON DR.
FONTANA, CA 92336

PREPARED FOR:
GEORGE MCCAN
15 ORION
IRVINE, CA 92603

DATE: 9/29/2025	JOB NO. 4113
DRAWN BY: RAS	SCALE 1"=20'
DESIGNED BY: KJR	SHEET 2 OF 3 SHEETS
CHECKED BY: KJR	

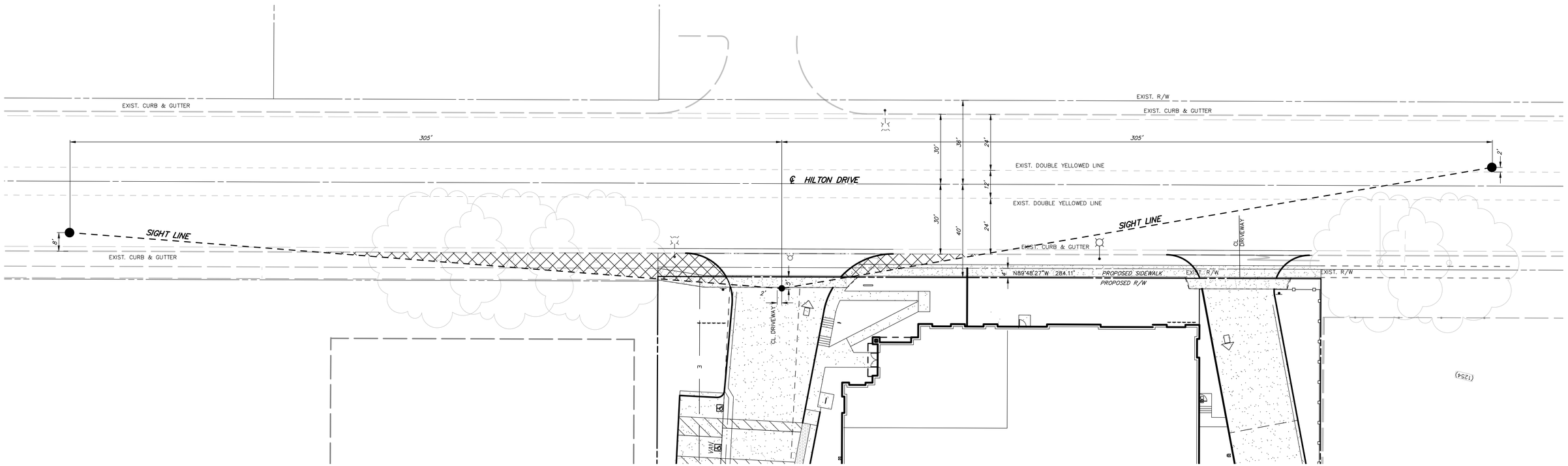

NOTE:

ALL SIGHT RESTRICTIONS TO BE CLEARED WITHIN SIGHT TRIANGLE. ANY OBJECT (E.I. LANDSCAPING, WALLS, STRUCTURES) WITHIN THE SIGHT TRIANGLE SHOULD NOT BE OVER 30 INCHES IN HEIGHT. TREES SHALL BE TRIMMED TO EIGHT FEET ABOVE THE ADJOINING CURB WITHIN THE SIGHT TRIANGLES.

LINE OF SIGHT NOTE:

HILTON DRIVE

SPEED LIMIT: 40 MPH

STOPPING DISTANCE: 305'

AREA TO KEEP CLEAR:

LINE OF SIGHT:

REGISTERED PROFESSIONAL ENGINEER
KEVIN J. RICHER
No. 43714
Exp. 3/31/2027
CIVIL
STATE OF CALIFORNIA

BENCHMARK

REVISIONS:

PREPARED UNDER THE SUPERVISION OF:

KEVIN J. RICHER
R.C.E. 43714 LIC. EXP. 3/31/27 — 9/29/2025 DATE

APPROVED BY:

DATE

LAND DEVELOPMENT DESIGN COMPANY, LLC
2313 E. Philadelphia St., Ste. F
Ontario, CA 91761
(909) 930-1466 • FAX (909) 930-1468
PLANNING • CIVIL • SURVEYING

LINE OF SIGHT EXHIBIT

SITE LOCATION:

LOT 2 TR. 13643
HILTON DR.
FONTANA, CA 92336

PREPARED FOR:

GEORGE MCCAN
15 ORION
IRVINE, CA 92603

DATE: 9/29/2025	JOB NO. 4113
DRAWN BY: RAS	SCALE 1"=20'
DESIGNED BY: KJR	SHEET 3
CHECKED BY: KJR	OF 3 SHEETS

TENTATIVE PARCEL MAP NO. 19950

"OFFICIAL USE ONLY"

EASEMENT NOTES

THE FOLLOWING EASEMENTS AND AGREEMENTS REFERENCE THE ITEM NUMBERS SHOWN IN THE TITLE REPORT DATED AUGUST 23, 2017, ORDER NUMBER 867201 PREPARED BY FIRST AMERICAN TITLE INSURANCE COMPANY.

A. AN EASEMENT FOR PUBLIC UTILITIES AND INCIDENTAL PURPOSES, RECORDED MARCH 30, 1923 IN BOOK 793 OF DEEDS, PAGE 71. [ITEM #4]

B. PROPERTY IS INCLUDED WITHIN A PROJECT AREA OF THE NORTH FONTANA REDEVELOPMENT PROJECT AND PROCEEDINGS FOR THE REDEVELOPMENT OF SAID PROJECT HAS BEEN INSTITUTED UNDER THE REDEVELOPMENT LAW AS DISCLOSED BY A DOCUMENT RECORDED DECEMBER 28, 1982, AS INSTRUMENT NO. 82–259093, OFFICIAL RECORDS. (NOT PLOTTABLE OF RECORD) [ITEM #5]

C. COVENANTS, CONDITIONS AND RESTRICTIONS AS SET FORTH IN THE DOCUMENT RECORDED JULY 10, 1986 AS INSTRUMENT NO. 86–180879, OFFICIAL RECORDS., RE–RECORDED JUNE 15, 1987 AS INSTRUMENT NO. 87–201269, MODIFIED AND RECORDED ON JUNE 15, 1987 AS INSTRUMENT NO. 87–201270, RECORDED AUGUST 10, 1988 AS INSTRUMENT NO. 88–261346, RECORDED OCTOBER 17, 1988 AS INSTRUMENT NO. 88–348800 AND RECORDED DECEMBER 12, 1988 AS INSTRUMENTS NO. 88–433295, ALL OF OFFICIAL RECORDS. (NOT PLOTTABLE OF RECORD) [ITEM #6]

D. COVENANTS, CONDITIONS AND RESTRICTIONS AS SET FORTH IN DOCUMENT RECORDED AUGUST 24, 1988 AS INSTRUMENT NO. 88–280718, OFFICIAL RECORDS AND AS MODIFIED BY INSTRUMENT 88–348800, RECORDED OCTOBER 17, 1988; INSTRUMENT NO. 89–473816, RECORDED DECEMBER 6, 1989; INSTRUMENT NO. 95–0223658, RECORDED JUNE 30, 1995; AND INSTRUMENT NO. 95–0236182, RECORDED JULY 11, 1995, ALL OF OFFICIAL RECORDS. (NOT PLOTTABLE OF RECORD) [ITEM #7]

E. AN EASEMENT FOR LANDSCAPE PURPOSES AS SHOWN AND DEDICATED ON TRACT 13643, [ITEM #8]

LEGAL DESCRIPTION:

LOT 2 OF TRACT 13643, IN THE CITY OF FONTANA, COUNTY OF SAN BERNARDINO, STATE OF CALIFORNIA, AS PER MAP RECORDED IN BOOK 220 OF MAPS, PAGES 98 THROUGH 100, RECORDS OF SAID COUNTY AS AMENDED BY CERTIFICATE OF CORRECTION, RECORDED AUGUST 9, 1991, AS INSTRUMENT NO. 91–303293, OFFICIAL RECORDS OF SAID COUNTY.

NOTES:

1. TENTATIVE MAP INCLUDES THE ENTIRE CONTIGUOUS OWNERSHIP OF THE LAND DIVIDER.
2. THE PROPERTY IS NOT WITHIN A COMMUNITY SERVICES DISTRICT.
3. THERE ARE NO EXISTING WELLS ON THE SITE.
4. THE LAND IS NOT SUBJECT TO LIQUEFACTION, OR OTHER GEOLOGIC HAZARDS, OR IS WITHIN A SPECIAL STUDIES ZONE.
5. THE LAND IS NOT SUBJECT TO OVERFLOW, INUNDATION, OR FLOOD.
6. NO OPEN SPACE AND RECREATIONAL AREAS.
7. NO EXISTING STRUCTURES ON SITE.
8. NO EXISTING OPEN CHANNELS.
9. THERE IS A PROPOSED ACCESS EASEMENT, PUBLIC UTILITY EASEMENT AND DRAINAGE EASEMENT.
10. THERE ARE NO REGULATED TREES ONSITE.

PROPOSED EASEMENT NOTES

(F) ACCESS EASEMENT OVER PARCEL 1 IN FAVOR OF PARCEL 2.

(G) PUBLIC UTILITY EASEMENT.

(H) DRAINAGE/WQMP EASEMENT

PROPERTY INFORMATION:

EXISTING GROSS ACREAGE:	4.01 ACRES
EXISTING NET ACREAGE:	3.97 ACRES
PROPOSED ACREAGE, LOT A	0.04 ACRES
PROPOSED ACREAGE, PARCEL 1:	2.29 ACRES
PROPOSED ACREAGE, PARCEL 2:	1.69 ACRES
ZONING:	BP3
SPECIFIC PLAN:	WEST END SPECIFIC PLAN
GENERAL PLAN:	LIGHT INDUSTRIAL (LI)
ASSESSOR'S PARCEL NO.:	1110–151–03
TOWNSHIP AND RANGE:	T1S, R6W, SEC. 2
PROPOSED USE:	INDUSTRIAL BUILDINGS
PROPOSED NUMBER OF PARCELS:	2
PROPOSED NUMBER OF LETTERED LOT:	1
PROPOSED LENGTH OF STREET FRONTAGE:	HILTON DRIVE=284.10'
FLOOD ZONE:	ZONE X MAP NO. 06071C8651H MAP REVISED AUGUST 28, 2008

SITE:

HILTON DRIVE
FONTANA, CA 92335

TOPOGRAPHY SOURCE:

FROM FIELD SURVEY PERFORMED JUNE 15, 2017 BY: LAND DEVELOPMENT DESIGN CORP.

BASIS OF BEARING:

THE CENTERLINE OF HILTON AVENUE IS N89°48'27"W AS SHOWN ON THE MAP OF TR 13643, RECORDED IN BOOK 220 OF MAPS, PAGES 98–100, RECORDS OF SAN BERNARDINO COUNTY.

EARTHWORK QUANTITIES:

RAW CUT	RAW FILL
2,895 C.Y.	2,939 C.Y.

NOTE: SITE IS EXPECTED TO BALANCE. THE BASE AT THE NORTH END OF THE PROPERTY CAN BE ADJUSTED AS NEEDED.

BASIC SETBACK LINES:

FRONT: 20 FEET
SIDE: 5 FEET

PREPARED BY:

LAND DEVELOPMENT DESIGN CORPORATION
2313 E. PHILADELPHIA STREET, UNIT "F"
ONTARIO, CA 91761
(909) 930 1466

OWNER/APPLICANT/SUBDIVDER:

HILTON LANE, LLC
15 ORION
IRVINE CA 92603
(949) 854–4518

PREPARED FOR:

GEORGE McCAN
15 ORION
IRVINE CA 92603
(949) 854–4518

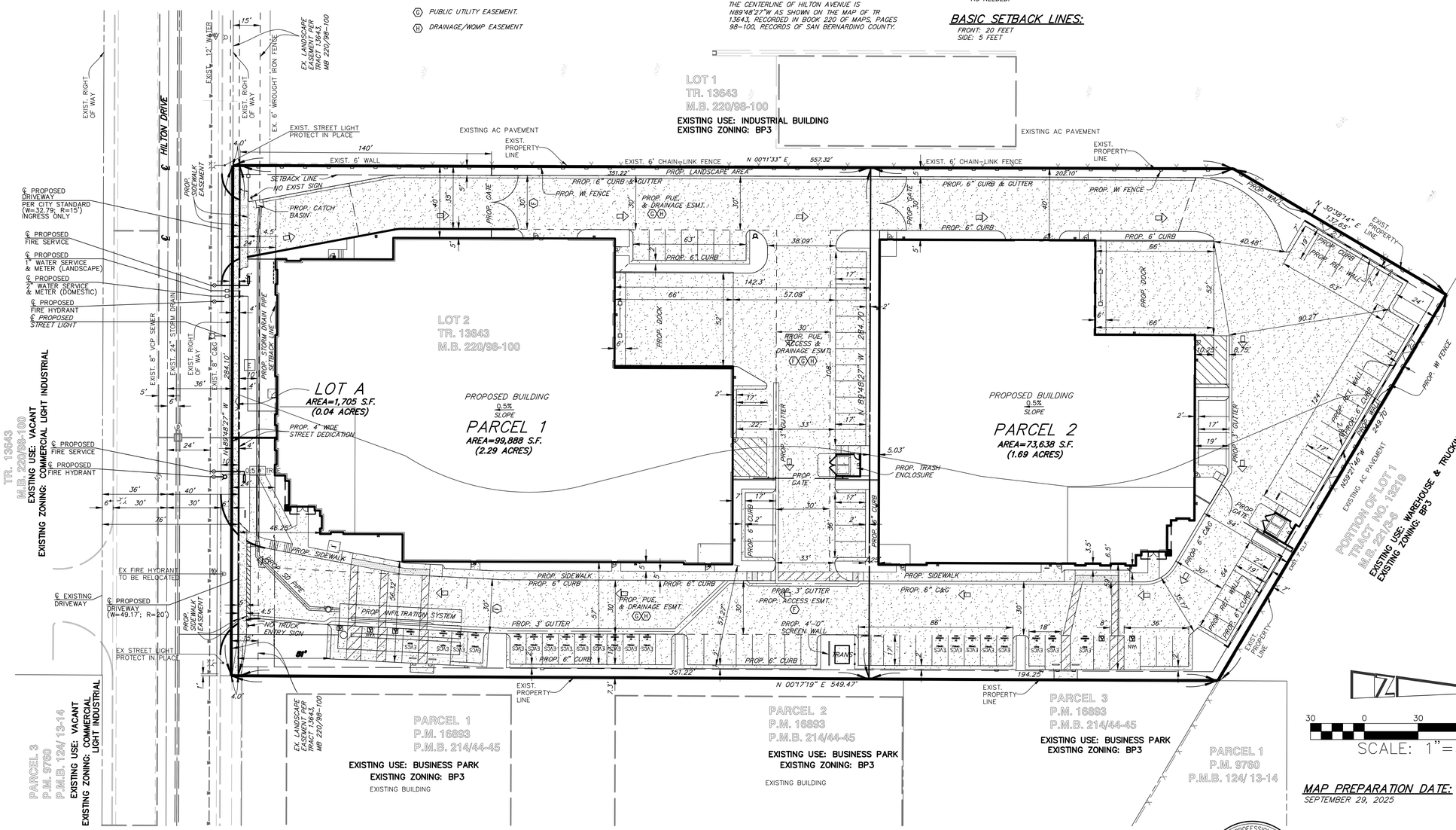

UTILITY PURVEYOR:

SO. CALIFORNIA EDISON CO.
7951 REDWOOD AVE.
FONTANA, CA 92335
(909) 920–5598

VERIZON
1400E. PHILLIPS BLVD.
POMONA, CA 91766
(909) 469–6327

FONTANA WATER CO.
8440 NUEVA AVE.
FONTANA, CA 92335
(909) 822–5046

CITY OF FONTANA
8353 SIERRA AVENUE
FONTANA, CA 92335
(909) 350–6632

SO. CALIFORNIA EDISON CO.
16231 VALLEY BLVD.
FONTANA, CA 92335
(909) 428–8411

WEST VALLEY WATER DISTRICT
855 W. BASELINE ROAD
RIALTO, CA 92377

LEGEND

BW	BACK OF WALK
EG	EXISTING GRADE
FG	FINISH GRADE
FS	FINISH SURFACE
TC	TOP OF CURB
FL	FLOW LINE
EP	EDGE OF PAVEMENT
FF	FINISH FLOOR
PAD	PAD GRADE
TW	TOP OF WALL
TF	TOP OF FOOTING
HP	HIGH POINT
LP	LOW POINT
CF	CURB FACE
TG	TOP OF GRATE
TRW	TOP OF RETAINING WALL
EDF	EXTRA DEPTH FOOTING
INV	INVERT OF PIPE
	TOP OF SLOPE
2%	RATE OF SLOPE
	TOE OF SLOPE
— S —	EXISTING SEWER
— W —	EXISTING WATER
	EXISTING FIRE HYDRANT
	EXISTING FDC
	EXISTING WATER VALVE
	EXISTING GAS METER
	EXISTING WATER METER
	EXISTING PULL BOX
	EXISTING ICV
	EXISTING STREET LIGHT
	EXISTING CONTOUR
	FINISH CONTOURS
	DAYLIGHT LINE
	REMOVAL
	EXIST. CONCRETE
	CONCRETE
	EXISTING TREES

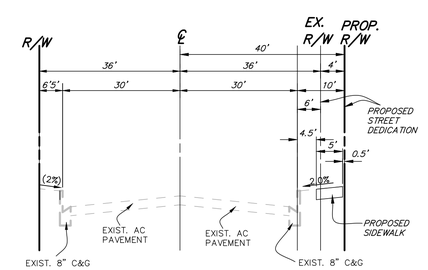

TYPICAL SECTION
N.T.S.
HILTON DRIVE

30 0 30 60 90
SCALE: 1"=30'

MAP PREPARATION DATE:

SEPTEMBER 29, 2025

REGISTERED PROFESSIONAL ENGINEER
DENNIS C. FARNSWORTH
No. 31653
CIVIL
STATE OF CALIFORNIA

PREPARED BY:

DENNIS C. FARNSWORTH
R.C.E. 31653 EXP. 12/31/26

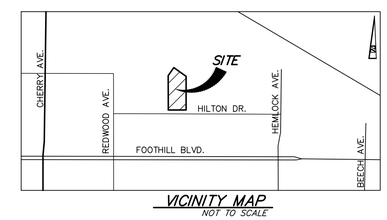

VICINITY MAP
NOT TO SCALE

DIGALERT
DIAL TOLL FREE
811
AT LEAST TWO DAYS BEFORE YOU DIG
UNDERGROUND SERVICE ALERT OF SOUTHERN CALIFORNIA

RESOLUTION NO. PC 2026-

A RESOLUTION OF THE PLANNING COMMISSION OF THE CITY OF FONTANA APPROVING TENTATIVE PARCEL MAP NO. 18-000005 (TPM NO. 19950) TO SUBDIVIDE ONE PARCEL INTO TWO PARCELS AND DESIGN REVIEW NO. 18-000010 FOR THE CONSTRUCTION OF TWO NEW INDUSTRIAL COMMERCE CENTER BUILDINGS AND ASSOCIATED SITE IMPROVEMENTS ON 3.98 ACRES OF VACANT LAND LOCATED ON THE NORTH SIDE OF HILTON DRIVE, EAST OF REDWOOD AVENUE, IDENTIFIED AS ASSESSOR'S PARCEL NUMBER 1110-151-03, PURSUANT TO A CATEGORICAL EXEMPTION IN ACCORDANCE WITH CEQA GUIDELINES SECTION 15332.

WHEREAS, the project site, identified as Assessor Parcel Number ("APN") 1110-151-03 ("Project Site"), was annexed from San Bernardino County and incorporated into the City of Fontana on April 28, 1970; and

WHEREAS, on May 9, 2018, the City of Fontana (City") received an application from C. VanDerHoek Architects, Inc. ("Applicant"), for a Tentative Parcel Map ("Tentative Parcel Map No. 18-000005) (TPM No. 19950)"), to subdivide one (1) parcel into two (2) and a Design Review ("DRP No. 18-000010") seeking approval to construct two (2) new warehouse buildings and associated site improvements at the Project Site ("Project"); and

WHEREAS, the Project Site has a General Plan Land Use designation of Light Manufacturing (I-L) and is located within the West End Specific Plan's BP-3 zoning district, which allows for the development; and

WHEREAS, pursuant to the California Environmental Quality Act (Pub. Res. Code §§ 2100 et seq.) ("CEQA"), the project is Categorically Exempt pursuant to Section 15332 (Class 32, Infill Development) and Section No. 3.22 of the 2019 Local Guidelines for Implementing the California Environmental Quality Act; and

WHEREAS, all notices required by statute and the Fontana Municipal Code ("FMC") have been given as required; and

WHEREAS, on March 6, 2026, a notice of the public hearing was published in Fontana Herald newspaper and simultaneously displayed at City Hall and at the Project Site; and

WHEREAS, the owners of property within 660 feet of the Project Site were notified via public hearing notice mailer prior to the public hearing; and

WHEREAS, on March 17, 2026, a duly notice public hearing on Tentative Parcel Map No. 18-000005 (TPM No. 19950) and DRP No. 18-000010 was held before the Fontana Planning Commission ("Planning Commission") to consider testimony and evidence presented by the Applicant, City Staff, and other interested parties; and

WHEREAS, the Planning Commission received public testimony and evidence presented by the Applicant, City Staff, and other interested parties, at the public hearing on

the Project, and the Planning Commission carefully considered all information, evidence, and testimony presented at its public hearing on Tentative Parcel Map No 18-000005 (TPM No. 19950) and DRP No. 18-000010; and

WHEREAS, the City wishes to protect and preserve the quality of life throughout the City, through effective land use and planning; and

WHEREAS, the Conditions of Approval are attached hereto as **Exhibit "A"** for Tentative Parcel Map No. 18-000005 (TPM No. 19950), and **Exhibit "B"** for Design Review No. 18-000010, and

WHEREAS, all other legal prerequisites to the adoption of this Resolution have occurred.

NOW, **THEREFORE**, the Planning Commission RESOLVES as follows:

Section 1. Recitals. The above recitals are true, correct and incorporated herein by reference.

Section 2. CEQA. The Planning Commission hereby determines that the project is categorically exempt pursuant to Section No. 15332 (Infill Development) of the California Environmental Quality Act and Section No. 3.22 (Categorical Exemption) of the 2019 Local Guidelines for Implementing the California Environmental Quality Act (CEQA). This project site is considered In-Fill Development and meets the CEQA requirements of Infill: (1) The project is consistent with the I-G General Plan land use designation, and the West End Specific Plan-BP-3 district regulations; (2) The project site is less than five (5) acres at approximately 3.98 adjusted gross acres; (3) The project site is not within any known sensitive or threatened habitat area; (4) The project site will not have any significant effect related to traffic, noise, air quality, or water quality; and (5) There are adequate public utilities services for the development of the proposed residential development. Furthermore, none of the exceptions in CEQA Guidelines Section 15300.2 apply to the Project. The Planning Commission further directs Staff to file a Notice of Exemption pursuant to this Finding.

Section 3. Tentative Parcel Map Findings. The Planning Commission hereby makes the following findings for Tentative Parcel Map No. 18-000005 (TPM No. 19950) pursuant to Section 26-218(D) "Processing of application", of the Fontana Zoning and Development Code:

Finding No. 1: **The proposed map is consistent with the city's general plan and any applicable specific plan.**

Findings of Fact: Tentative Parcel Map No. 18-000005 (TPM No. 19950) is consistent with the General Plan Land Use Map of Light Industrial (I-L) as it will enable industrial development as allowed under the city's general plan and the West End Specific Plan. The Tentative Parcel Map proposes to subdivide one parcel into two parcels (Parcel No. 1 will have approximately 2.29 acres and Parcel No. 2 will have approximately 1.69 acres) to support the industrial development.

Finding No. 2: **That the design or improvements of the proposed subdivision are consistent with the general plan and any applicable specific plan.**

Findings of Fact: The Project is designed to be consistent with the General Plan and the on-site improvements meet the General Plan goals and objectives as well as the zoning requirements of the West End Specific Plan - BP-3 district. The General Plan Land Use designation for the Project Site is Light Industrial (I-L), which is intended to provide for industrial uses. The Project will develop an industrial commerce center consistent with this designation of the General Plan. The construction of the on-site and off-site improvements such as curb, gutter, sidewalks, and underground utilities will ensure that the Project meets the requirements set for the in the FMC and the specific plan. Therefore, the proposed improvements will be consistent with the existing development. The Project has been reviewed by the Planning Department, Engineering Department and Fire Protection, and it was determined that the conditions of approval will ensure compliance with FMC and regulations.

Finding No. 3: **The site is physically suitable for the type and density of development proposed.**

Findings of Fact: The approximately 3.98 gross acre Project Site is adequate in size to accommodate the two industrial commerce buildings totaling 71,985 square feet (Building No.1 will be 41,218 square feet and 4,668 square feet of office space and Building No. 2 will have 30,767 square feet and 4,668 square feet of office space). The existing topography is relatively level and is conducive to the development of the Project and public improvements are designed to enable access and services to the Project Site. Therefore, the site is suitable for this type of development. The lot size is consistent with nearby industrial development.

Finding No. 4: **The design of the subdivision or the proposed improvements are not likely to cause substantial environmental damage or substantially and avoidably injure fish or wildlife or their habitat.**

Findings of Fact: The design of Tentative Parcel Map No. 18-000005 (TPM No. 19950) and the associated improvements will not likely cause public health problems. The development complies with the Zoning and Development Code and General Plan. The improvements will provide safe walking paths and driving routes which will promote public health and safety. Therefore, there will be no significant effect on the environment.

Finding No. 5: **The design of the subdivision or type of improvements will not cause serious public health problems.**

Findings of Fact: The design of Tentative Parcel Map No. 18-000005 (TPM No. 19950) will not cause public health problems. The development complies with the Zoning and Development Code and General Plan and the West End Specific Plan. Improvements include connection to the public sewer and

public storm drain systems, modifications to the existing sidewalks, and drainage and grading improvements to ensure a safe and well-designed Project.

Finding No. 6: **The design of the subdivision or the type of improvement will not conflict with easements acquired by the public at large for access through or use of property within the proposed subdivision.**

Findings of Fact: The design of Tentative Parcel Map No. 18-000005 (TPM No. 19950) and associated public improvements will not conflict with access easements acquired by the public. Vehicular access to and from the Project Site would be provided from two driveways on Hilton Drive, a publicly maintained street. The internal circulation has been reviewed by Planning, Fire, Traffic, and Engineering and was found to be sufficient to support this Project.

Section 4. Design Review Findings. The Planning Commission hereby makes the following findings for DR No. 18-000010 in accordance with Section No. 30-120, "Findings for approval" of the Fontana Zoning and Development Code:

Finding No. 1: **The proposal is consistent with the general plan, Zoning and Development Code, and any specific plan or area plan.**

Findings of Fact: The Project is consistent with the Land Use designation of Light Industrial (I-L) by constructing two industrial commerce center buildings within the industrial area of the West End Specific Plan. The Project will develop two (2) new industrial commerce center buildings totaling 71,985 square feet (Building No.1 will be 41,218 square feet and 4,668 square feet of office space and Building No. 2 will have 30,767 square feet and 4,668 square feet of office space) on 3.98 acres. Architectural features for the Project include metal doors, glazed windows, and exterior lighting. Additionally, the Project Site aligns with Chapter 15 (Land Use, Zoning, and Urban Development) of the General Plan Land Use designation because it provides industrial uses where there is easy access to regional transportation routes.

The site and building design comply with the criteria contained in the design review section of the Fontana Zoning and Development Code and the West End Specific Plan. The industrial commerce center buildings design will feature an exterior light gray tone color pallet with black accents. The variations to the building face, varying roof lines and building height of 47'-6" will make the project architecturally pleasing and be consistent with the surrounding area as well as the design criteria contained in the Zoning and Development Code and the Specific Plan. The Project has high quality architecture and appropriate screening comprised of landscaping that will make for an appropriate and desirable development.

Finding No. 2. **The proposal meets or exceeds the criteria contained in Chapter 30 and will result in an appropriate, safe, and desirable development**

promoting the public health, safety, and welfare of the community.

Findings of Fact: The Project consists of the development of two (2) new industrial commerce center buildings totaling 71,985 (Building No.1 will be 41,218 square feet and 4,668 square feet of office space and Building No. 2 will have 30,767 square feet and 4,668 square feet of office space) on approximately 3.98 acres. The site is currently vacant. The Project will be constructed pursuant to all applicable building, zoning and fire codes, in addition to the Conditions of Approval attached hereto as Exhibits A and B. Architectural features such as glazing, metal features and a variety of colors add structural and visual interest to the buildings. Additionally, variations to the building face and roof lines area architecturally pleasing and consistent with the existing development in the surrounding area. Street lighting and on-site lighting have been incorporated to create an attractive atmosphere along adjacent parcels. The site improvements have been evaluated by the City of Fontana Fire, Building and Safety, and Engineering Departments. During the review process, changes were made to the plans to ensure that the Project is safe and well-designed.

Finding No. 3: **The proposal, in its design and appearance, is aesthetically and architecturally pleasing, resulting in a safe, well-designed facility while enhancing the character of the surrounding neighborhood.**

Findings of Fact: The Project is aesthetically and architecturally pleasing and compatible with the surrounding area. The Project Site is physically suitable in size and shape to support the two new industrial commerce center buildings which will be built in accordance with the zoning and fire codes.

Architectural relief utilized for the buildings consists of decorative lighting, varied roof lines, and other features appropriate to the style. The Project enhances the surrounding neighborhood by incorporating architectural style that complements the surrounding area. Additionally, landscaping will utilize plants to complement the architecture of the buildings and the development of as a whole. The Project has been reviewed by the Engineering, Building and Safety and Fire Departments for safety.

Finding No. 4: **The site improvements are appropriate and will result in a safe, well-designed facility.**

Findings of Fact: The development has appropriate site improvements. Project features include sidewalks, drainage, perimeter walls, and fencing to provide a safe and well-designed neighborhood. The Project has been reviewed by the Planning, Engineering, Building and Safety Departments, as well as the Fontana Fire Prevention for site circulation, access, and safety and found to meet the requirements for all applicable building code, zoning, and fire code standards.

Section 5. Approvals. Based on the foregoing, the Planning Commission hereby approves Tentative Parcel Map No. 18-000005 (TPM No. 19950), and DRP No. 18-

000010 subject to the Conditions of Approval, attached hereto as "**Exhibit A**" and "**Exhibit B",** respectively, and incorporated herein by this reference as though fully set forth herein.

Section 6. Resolution Regarding Custodian of Record: The documents and materials that constitute the record of proceedings on which this Resolution has been based are located at the Planning Department, 8353 Sierra Avenue, Fontana, CA 92335. This information is provided in compliance with Public Resources Code section 21081.6.

Section 7. Certification. The Secretary of the Planning Commission shall certify to the adoption of this Resolution.

Section 8. Effective Date. This Resolution shall become effective immediately upon its adoption.

Section 9. Severability. If any provision of this Resolution or the application of any such provision to any person or circumstance is held invalid, such invalidity shall not affect other provisions or applications of this Resolution that can be given effect without the invalid provision or application.

PASSED, APPROVED, AND ADOPTED by the Planning Commission of the City of Fontana, California, at a regular meeting held on this 17th day of March 2026.

City of Fontana

_____
Joseph Armendarez, Chairperson

ATTEST:

I, Torrie Lozano, Secretary of the Planning Commission of the City of Fontana, California, do hereby certify that the foregoing resolution was duly and regularly adopted by the Planning Commission at a regular meeting thereof, held on the 17th day of March 2026, by the following vote, to-wit:

AYES:
NOES:
ABSENT:
ABSTAIN:

_____
Torrie Lozano, Secretary

ATTACHMENT NO. 3

Exhibit "A"

FONTANA
CALIFORNIA

CITY OF FONTANA

CONDITIONS OF APPROVAL

PROJECT: Master Case No. 18-000053 **DATE:** March 17, 2026
Tentative Parcel Map No. 18-000005 (TPM No. 19950)

LOCATION: North of Hilton Drive and west of Hemlock Avenue (APN: 1110-151-03).

PLANNING DEPARTMENT:

1. The rights and privileges granted by this project shall not become effective, nor shall the applicant commence the use for which this project is granted, until both of the following have occurred:
   A. All requirements of the Fontana City's Municipal Code shall be complied with.
   B. All Conditions of Approval imposed on this project have been fulfilled.

2. The applicant /developer/ property owner shall defend, indemnify, protect and hold harmless the City of Fontana or its agents, officers, and employees from any claim, action or proceeding against the City of Fontana or its agents, officers, or employees to attack, set aside, void, or annul an approval of the Planning Commission and/or City Council concerning this subdivision, which action is brought within the time period provided for in Government Code Section 66499.37. The City of Fontana shall promptly notify the applicant of any claim, action, or proceeding and the City of Fontana shall cooperate in the defense. The applicant shall defend, indemnify, protect and hold harmless the City of Fontana or its agents, officers, attorneys and employees from any and all actual or alleged claims, actions or proceedings against the City of Fontana or its agents, officers, attorneys or employees to attack, set aside, void, annul or seek monetary damages arising out of any challenge to the applicant's proposed project or to any approvals of the Planning Commission and/or City Council concerning this project, including but not limited to actions challenging CEQA actions, permits, variances, plot plans, design plans, maps, licenses, and amendments. The City of Fontana shall promptly notify the applicant of any claim, action, or proceeding and the City of Fontana shall cooperate in the defense.

3. In the event of any such third-party action or proceeding, the City shall have the right to retain its own separate legal counsel to defend the interests of the City. The applicant shall be responsible for reimbursing the City for such legal fees and costs, in their entirety, including actual attorneys' fees, which may be incurred by the City in defense of such action or proceeding. This indemnification shall also include, but not be limited to, damages, fees and/or costs awarded against the City, if any, and cost of suit, attorneys' fees, and other costs, liabilities and expenses incurred in connection with such claim,

action, or proceeding whether incurred by applicant, the City and/or any parties bringing such forth.

The City of Fontana and the applicant acknowledge that the City would not have approved this project if the City were to be liable to applicant in damages under or with respect to all or any part of this application or this condition of approval. Accordingly, applicant shall not sue the City for damages or monetary relief for any matter arising from or related to this condition of approval. Applicant's sole and exclusive remedy shall be limited to declaratory/injunctive relief, mandate, and/or specific performance.

4. Tentative Parcel Map No. 22-000005 (TPM No. 19950) shall comply with all applicable development standards of, Chapter 26 (Subdivisions), Chapter 30 (Zoning and Development), and the Subdivision Map Act.

5. The applicant/developer shall underground all utilities, pursuant to Section 27-50 through 27-54 of the City of Fontana Municipal Code, which for the purpose of this condition shall also include all boxes, structures and/or other equipment located in the public right-of-way, any public utility easement(s) and on any private property, to the satisfaction of the Director of Planning. A note to this effect shall be placed on the map prior to recordation of the final map.

6. Tentative Parcel Map No. 22-000005 (TPM No. 19950) shall become null and void two (2) years from the date of approval, unless the appropriate permits have been obtained and construction, defined as permit obtainment, commencement of construction of the primary building on site, and successful completion of the first Building and Safety Division inspection, has commenced within this period.

7. In the event that one or more of the Conditions of Approval for this project needs to be amended and/or deleted due to health, safety or welfare concerns, the City Manager is authorized to approve or conditionally approve such amendment/deletion, provided that City Manager shall bring such proposed amendment/deletion to the City Council at the next available meeting for City Council ratification, but in no event later than sixty (60) days following the City Manager's decision. The noticing of such City Council meeting for possible ratification shall be pursuant to Section No. 30-30 of the Municipal Code.

8. The applicant shall post a publicly visible sign on the project site with the telephone number and 24-hour point of contact for dust, noise and construction complaints. The 24-hour point of contact shall be available 24 hours a day, 7 days a week and have authority to commit additional assets to control dust, or respond to construction complaints after hours, on weekends and on holidays. Construction shall be limited to 7:00 am to 6:00 pm on weekdays, 8:00 am to 5:00 pm on Saturdays, and no construction on Sundays and Holidays.

9. Historic Archaeological Resources:
   A. Upon discovery of any tribal cultural or archaeological resources, cease construction activities in the immediate vicinity of the find until the find can be assessed. All tribal cultural and archaeological resources unearthed by project construction activities shall be evaluated by the qualified archaeologist and tribal monitor/consultant. If the resources are Native American in origin, interested Tribes

(as a result of correspondence with area Tribes) shall coordinate with the landowner regarding treatment and curation of these resources. Typically, the Tribe will request preservation in place or recovery for educational purposes. Work may continue on other parts of the project while evaluation takes place.

B. Preservation in place shall be the preferred manner of treatment. If preservation in place is not feasible, treatment may include implementation of archaeological data recovery excavation to remove the resource along the subsequent laboratory processing and analysis. All Tribal Cultural Resources shall be returned to the Tribe. Any historic archaeological material that is not Native American in origin shall be curated at a public, non-profit institution with a research interest in the materials, if such an institution agrees to accept the material. If no institution accepts the archaeological material, they shall be offered to the Tribe or a local school or historical society in the area for educational purposes.

C. Archaeological and Native American monitoring and excavation during construction projects shall be consistent with current professional standards. All feasible care to avoid any unnecessary disturbance, physical modification, or separation of human remains and associated funerary objects shall be taken. Principal personnel shall meet the Secretary of the Interior standards for archaeology and have a minimum of 10 years' experience as a principal investigator working with Native American archaeological sites in southern California. The Qualified Archaeologist shall ensure that all other personnel are appropriately trained and qualified.

10. The applicant shall meet all requirements identified in the Industrial Commerce Centers Sustainability Standards (Ordinance No. 1891).

11. A copy of the Industrial Commerce Centers Sustainability Standards requirements shall be placed on the final grading plans and the final building plans.

12. The project shall comply with all applicable provisions, regulations, and development standards of the Fontana Municipal Code.

13. The applicant shall adhere to all landscape setback requirements as outlined in the Fontana Municipal Code.

14. The applicant shall meet all requirements of the Trip Reduction Measures in of the Zoning and Development Code (Section 30-962).

ENGINEERING:

15. The Applicant shall provide a Land Improvement Agreement, with accompanying security. The agreement shall be executed on City-provided forms.

Exhibit "B"

FONTANA
CALIFORNIA

CITY OF FONTANA

CONDITIONS OF APPROVAL

PROJECT: Master Case No. 18-000053
Design Review No. 18-000010

DATE: March 17, 2026

LOCATION: North of Hilton Drive and west of Hemlock Avenue (APN: 1110-151-03).

PLANNING DEPARTMENT:

1. This Design Review shall become null and void two (2) years from the date of approval, unless the appropriate permits have been obtained and construction, defined as permit obtainment, commencement of construction of the primary building on site, and successful completion of the first Building and Safety Department inspection, has commenced within this period.

2. The rights and privileges granted by this project shall not become effective, nor shall the applicant commence the use for which this project is granted, until both of the following have occurred:
   A. All requirements of the Fontana City's Municipal Code shall be complied with.
   B. All Conditions of Approval imposed on this project have been fulfilled.

3. The applicant/developer/property owner shall defend, indemnify, protect and hold harmless the City of Fontana or its agents, officers, attorneys and employees from any and all actual or alleged claims, actions or proceedings against the City of Fontana or its agents, officers, attorneys or employees to attack, set aside, void, annul or seek monetary damages arising out of any challenge to the applicant's proposed project or to any approvals of the Planning Commission and/or City Council concerning this project, including but not limited to actions challenging CEQA actions, permits, variances, plot plans, design plans, maps, licenses, and amendments. The City of Fontana shall promptly notify the applicant of any claim, action, or proceeding and the City of Fontana shall cooperate in the defense.

In the event of any such third-party action or proceeding, the City shall have the right to retain legal counsel. The applicant shall be responsible and reimburse the City for such legal fees and costs, in their entirety, including actual attorneys' fees, which may be incurred by the City in defense of such action or proceeding. This indemnification shall also include, but not be limited to, damages, fees and/or costs awarded against the City, if any, and cost of suit, attorneys' fees, and other costs, liabilities and expenses incurred in connection with such claim, action, or proceeding whether incurred by applicant, the City and/or any parties bringing such forth.

Except as required under applicable State and Federal law, the City of Fontana and the applicant acknowledge that the City would not have approved this project if the City were to be liable to applicant in damages under or with respect to all or any part of this application or this condition of approval. Accordingly, applicant shall not sue the City for damages or monetary relief for any matter arising from or related to this condition of approval. Applicant's sole and exclusive remedy shall be limited to declaratory/injunctive relief, mandate, and/or specific performance.

4. This project shall comply with all applicable provisions, regulations and development standards of the Fontana Zoning Code and Development Code, Fontana Municipal Code (FMC).

5. The applicant shall meet all requirements identified in the Industrial Commerce Centers Sustainability Standards (Ordinance No. 1891).

6. The applicant shall adhere to all landscape setback requirements as outlined in the Fontana Municipal Code.

7. The applicant/developer shall underground all utilities pursuant to Section 27-50 through 27-54 of the City of Fontana Municipal Code, which for the purpose of this conditions shall also include all boxes, structures and/or other equipment located in the public right-of-way, any public utility easement(s) and on any private property, to the satisfaction of the Director of Planning. A note to this effect shall be placed on the map prior to recordation of the final map.

8. Historic Archaeological Resources
   A. Upon discovery of any tribal cultural or archaeological resources, cease construction activities in the immediate vicinity of the find until the find can be assessed. All tribal cultural and archaeological resources unearthed by project construction activities shall be evaluated by the qualified archaeologist and tribal monitor/consultant. If the resources are Native American in origin, interested Tribes (as a result of correspondence with area Tribes) shall coordinate with the landowner regarding treatment and curation of these resources. Typically, the Tribe will request preservation in place or recovery for educational purposes. Work may continue on other parts of the project while evaluation takes place.
   B. Preservation in place shall be the preferred manner of treatment. If preservation in place is not feasible, treatment may include implementation of archaeological data recovery excavation to remove the resource along the subsequent laboratory processing and analysis. All Tribal Cultural Resources shall be returned to the Tribe.

Any historic archaeological material that is not Native American in origin shall be curated at a public, non-profit institution with a research interest in the materials, if such an institution agrees to accept the material. If no institution accepts the archaeological material, they shall be offered to the Tribe or a local school or historical society in the area for educational purposes.

C. Archaeological and Native American monitoring and excavation during construction projects shall be consistent with current professional standards. All feasible care to avoid any unnecessary disturbance, physical modification, or separation of human remains and associated funerary objects shall be taken. Principal personnel shall meet the Secretary of the Interior standards for archaeology and have a minimum of 10 years' experience as a principal investigator working with Native American archaeological sites in southern California. The Qualified Archaeologist shall ensure that all other personnel are appropriately trained and qualified.

9. All Conditions of Approval contained herein shall be incorporated into all applicable final construction plans and a copy of these conditions, signed by the property owner or legal representative, shall be placed on a sheet in the final building and grading plans prior to issuance of any building or grading permits.

10. The current development fees must be paid prior to issuance of building/construction permits.

11. In the event that one or more of the Conditions of Approval for this project needs to be amended and/or deleted due to health, safety or welfare concerns, the City Manager is authorized to approve or conditionally approve such amendment/deletion, provided that City Manager shall bring such proposed amendment/deletion to the City Council at the next available meeting for City Council ratification, but in no event later than sixty (60) days following the City Manager's decision. The noticing of such City Council meeting for possible ratification shall be pursuant to Sections No. 30-30 of the Municipal Code.

12. Color combinations and color schemes for buildings approved under a design review application shall not be modified or changed without prior approval of the original approving body by a revision to the original application. Minor hue color changes may be approved by the Director of Planning. The Director of Planning may refer minor hue color changes to the original approving body for consideration under a revision to the original application.

13. Exterior lighting compatible with the design of the building shall be provided for the parking lot. The lighting shall be directed and shielded so as to illuminate only the parking area and to avoid glare impacts on adjacent properties.

14. Sidewalks shall be provided for all new developments in accordance with the city's circulation element of the General Plan.

15. The applicant/developer shall provide sufficient bicycle racks to accommodate a minimum of four bicycle spaces.

16. The applicant/developer shall provide bicycle racks that include locks as well as electric plugs to charge electric bikes. The racks shall be located as close as possible to employee entrance(s).

17. All parking stalls shall be clearly marked by double striping pavement painting. Parking stall sizes shall be measured from the mid-point between the striping. No parking spaces shall be designated in an industrial parking facility, except for disabled persons parking, van pool, carpool, or any other designated parking as required by law.

18. All signs shall be reviewed under a separate Design Review Sign application.

19. All roof-mounted equipment and ground mounted equipment shall be screened from view from adjacent properties and streets to the satisfaction of the Director of Planning.

20. All landscaping shall be healthy and maintained in a reasonable manner as determined by the Director of Planning or his/her designee.

21. The transformer shall be screened by a solid screen wall and mature, dense landscaping, and not visible from the public right-of-way.

22. After the fifteen (15) day appeal period, the applicant shall remove the notice of Filing sign(s) from the project site. The applicant may request a refund of the sign deposit; the request shall be in writing accompanied with a refund application. The request shall be submitted to the Planning Department.

23. Development fees and Planning Department final inspection fees must be paid prior to Certificate of Occupancy.

24. Applicant shall pay all applicable service fees pursuant to the City of Fontana Municipal Code.

25. The applicant/developer/property owner shall provide up-lighting on the perimeter and up-light proposed trees to the satisfaction of the Director of Planning and his/her designee.

26. In the event that any off-site utility and/or infrastructure improvements are required as a direct result of future projects, construction of such off-site utility and infrastructure improvements shall not occur concurrently with the demolition, site preparation, and grading phases of project construction. This requirement shall be clearly noted on all applicable grading and/or building plans.

27. Adhere to the City standard of one foot candle minimum for all entrances, exits, pedestrian paths, parking lots, and activity areas. Reflect all light fixtures on the site plan. All areas shall be illuminated during all hours of darkness and all luminaries utilized shall be vandal-resistant fixtures. The type of lighting shall be fluorescent, white L.E.D.s or metal halide. Provide a photometric layout under separate exhibit to ensure the minimum light standard is met.

28. Incorporate an anti-graffiti coating onto the exterior of all proposed block walls to discourage graffiti.

29. The applicant shall meet all requirements of the Trip Reduction Measures in of the Zoning Code (Article XIV, Transportation Demand Management and Trip Reduction Measures).

ATTACHMENT NO. 3

30. There shall be no refrigerated uses on site; unless a future tenant proposing to have such uses conducts an update of the California Environmental Quality Act (CEQA) document and any applicable studies/memorandums to amend this Condition of Approval.

31. The applicant shall incorporate hostile landscape into the interior, perimeter landscape setback areas to discourage subjects from accessing the site.

32. The applicant shall post a publicly visible sign on the project site with the telephone number and 24-hour point of contact for dust, noise and construction complaints. The 24-hour point of contact shall be available 24 hours a day, 7 days a week and have authority to commit additional assets to control dust, or respond to construction complaints after hours, on weekends and on holidays. Construction shall be limited to 7:00 am to 6:00 pm on weekends, 8:00 am to 5:00 pm on Saturdays, and no construction on Sundays and Holidays.

33. Adhere to the Standard Building Security Specifications of the Fontana Police Department.

34. A copy of the Industrial Commerce Centers Sustainability Standards requirements shall be placed on the final grading plans and final building plans.

Prior To Issuance of Grading Permit

35. All Conditions of Approval and Mitigation, Monitoring, and Reporting Program (MMRP) contained herein shall be incorporated into all applicable final construction plans and a copy of these conditions shall be placed on a sheet in the final building and grading plans prior to issuance of any building or grading permits.

BUILDING AND SAFETY:

36. The applicant shall design the project to show compliance with the latest adopted edition of the following codes as applicable:
    A. California Building Code
    B. California Residential Code
    C. California Electrical Code
    D. California Mechanical Code
    E. California Plumbing Code
    F. California Energy Code
    G. California Fire Code
    H. California Green Building Standards Code

37. The applicant shall install an automatic fire suppression system, which is required in all new construction per FMC Chapter 11 Article II. Design and type of system shall be based upon the requirements of the Building Code, Fire Code and the requirements of the Fontana Fire Prevention District.

38. The applicant shall comply with the requirements of the South Coast Air Quality Management District (909-396-2000). SCAQMD requirements shall be satisfied prior to the issuance of any permit if hazardous materials are stored and/or used.

39. The applicant shall verify that any temporary building, trailer, commercial coach, etc. installed and/or used in connection with a construction project complies with FMC Chapter 5 Article XIV.

40. The applicant shall verify that all perimeter/boundary walls are designed and constructed so that the outer/exterior face of the wall is as close as possible to the lot line. In any case, the outer/exterior face of the wall shall be within two (2) inches of the lot line. Distances greater than two (2) inches may be approved prior to construction by the Building Official on a case-by-case basis for extenuating circumstances.

41. The applicant shall have the tract or parcel map recorded prior to the issuance of any building permits.

42. The applicant shall comply with the following grading requirements:
    A. Grading plans shall be submitted to and approved by Building & Safety. The grading plans shall indicate all site improvements and shall indicate complete drainage paths of all drainage water run-offs.
    B. All drainage water shall drain via approved methods to an approved location, such as a public street, a public drainage system, etc.
    C. Drainage water shall not cross over a public sidewalk. Drainage water may, however, cross under a sidewalk if an approved drainage structure is used.
    D. A recorded drainage acceptance agreement is required from adjoining property(s) receiving flows from this property.
    E. No water course or natural drainage shall be obstructed.
    F. Minimum slope or grade for ALL drainage structures shall be one half (0.50) percent for concrete and one (1.0) percent for all other, or as otherwise approved by the Building Official.
    G. Drainage water shall not pass from an 'improved' type of drainage structure to an 'unimproved' type of drainage structure (e.g., concrete swale to a dirt swale) unless otherwise approved by the Building Official.
    H. A complete hydrology study using the latest edition of the San Bernardino County Flood Control Hydrology Manual, and complete hydraulic calculations justifying the size, slope, capacity, etc. of any and all drainage structures being utilized, shall be submitted to and approved by Building & Safety.
    The on-site drainage system shall, as a minimum, be designed to handle the run-off generated by a ten (10) year storm. Check for flooding of all on-site structures (buildings) and all adjacent properties during a hundred (100) year storm.
    I. The grading plans shall, as a minimum, contain sections at all lot lines and/or permit boundary lines. These sections shall clearly indicate:
        1. The relationship between the proposed finished on-site grade elevations and the existing adjacent property grade elevations (Indicate any additional drainage water that may come from an adjacent property.); and
        2. The ground cover/finished surface material being proposed (e.g., type of pavement, plant material, etc.); and
        3. All proposed drainage structures; and
        4. Any proposed and/or required walls or fencing.

43. The applicant is required to obtain permits for the removal and/or demolition of structures.

ATTACHMENT NO. 3

44. The applicant shall verify that all exterior lighting shall be oriented, directed, and/or shielded as much as possible so that direct illumination does not infringe onto adjoining properties.

PRIOR TO ISSUANCE OF BUILDING/CONSTRUCTION PERMITS

45. The following items (as applicable) shall be completed by the applicant and submitted to Building & Safety prior to the issuance of building permits for this project:
    A. Precise grading plans shall be approved
    B. Rough grading completed
    C. Compaction certification
    D. Pad elevation certification
    E. Rough grade inspection signed off by a City Building Inspector

46. Any proposed structure(s) shall not cross any lot line and shall comply with all requirements of the California Building Code, prior to any building permits being issued.

ENGINEERING:

47. The Project shall be served by the City's sanitary sewer system, all sewer facilities shall be constructed in accordance with the City Standards. Main trunk sewer line shall be in accordance with master sanitary sewer plan or as approved by the City Engineer. Onsite Sewer shall be privately maintained.

48. The Applicant shall obtain design and plan approval from all utility providers having jurisdiction over the on-site and off-site utilities. Completion of all undergrounding of on-site and off-site utilities is required by Section 27-52 of the City Municipal Code and in accordance with plans and specifications approved by the City Engineer.

49. The Applicant shall maintain all improvements and utilities within the public right- of-way, including street sweeping, prior to issuance of final certificate of occupancy by the City.

PRIOR TO ISSUANCE OF GRADING PERMIT

50. The Applicant shall submit and gain approval of a complete Water Quality Management Plan report in accordance with the County of San Bernardino Technical Guidance Document and latest template.

51. The Applicant shall submit, and gain approval of a final drainage study prepared in accordance with the County of San Bernardino Hydrology Manual and Fontana Master Plan of Drainage.

PRIOR TO MAP RECORDATION

52. The Applicant shall provide a Land Improvement Agreement, with accompanying security. The agreement shall be executed on City-provided forms.

PRIOR TO ISSUANCE OF ANY OTHER CONSTRUCTION PERMITS

53. The Applicant shall record All map's, right-of-way dedications, easements, as required for the development.

54. The Applicant shall submit engineered improvement plans and obtain full approval. All required public improvements, including but not limited to streets, storm drainage systems, sewers, traffic signals, streetlights, striping, signs, landscape, and any required traffic control and/or detour plans. For a full list of traffic requirements, refer to the Traffic Division's conditions of approval. All plans shall conform to City Standards and Specifications and must be approved by the City Engineer.

PRIOR TO ISSUANCE OF FINAL CERTIFICATE OF OCCUPANCY

55. Complete all public improvements required of the project. Underground utilities required of the project. Ensure streetlights are energized and operating properly.

56. The Applicant/Engineer to provide the City of Fontana with As Built/Record Drawings for all public improvement plans. The Applicant/Developer shall provide a copy of the streetlight electric bill.

57. Slurry seal roads effected by the development as directed by the inspector. Slurry seal limits may extend past the project frontage to address existing striping/pavement markings that conflicts with new striping/pavement markings, repair trenches, and other areas as determined by the inspector.

58. The Surveyor of Record shall provide centerline ties to the City of Fontana reflecting proper setting of all survey monuments within the project limits and replace any existing survey monuments damaged or removed during construction.

59. The Surveyor of Record shall set survey monuments as required by the map and corner records must be recorded with the County. The Surveyor of Record shall notify the City in writing that monuments have been set in accordance with the recorded subdivision map and he/she has been paid in full for doing so.

60. All sewers shall be video inspected by applicant/contractor. Sewer video shall include clean-out connection, clean-out to lateral segment, lateral, and main line. Contractor performing the video inspection must have a NASSCO PACP, LACP, and MACP certification. Applicant shall provide a copy of the video on DVD or flash drive to inspection staff with an accompanying full report. Videos to be inspected and approved by City Inspector. If removal and replacement of any utility is required, a subsequent video of the repair will be required.

61. All storm drains shall be video inspected by applicant/contractor. Storm drain video shall include main lines and laterals. Applicant shall provide a copy of the video on DVD or flash drive to inspection staff. Videos to be inspected and approved by City Inspector. If removal and replacement of any utility is required, a subsequent video of the repair will be required.

62. The Applicant/Engineer of Record shall submit a conforming copy of the recorded Memorandum of Agreement for the Water Quality Management Plan and Storm Water Best Management Practice transfer. The Access, Maintenance, and the WQMP Certification for BMP Completion must be submitted to the City Project Engineer.

ENGINEERING TRAFFIC:

63. Project ingress and egress locations and restrictions shall be as follows, with additional or lesser restrictions being necessitated subject to changes in the site plan and approval of the City Engineer:
    A. The Project may have up to two (2) ingress/egress points along Hilton Drive. The westerly access point shall be designed, constructed, and signed to restrict access to left- and right-turning ingress movements only. Egress for all vehicle types shall be prohibited at the westerly driveway. The easterly driveway may accommodate full access (i.e., left- and right-turning inbound and outbound) movements for passenger vehicles, and shall be designed, constructed, and signed to restrict truck access to left- and right-turning egress movements only. Ingress for trucks shall be prohibited at the easterly driveway.

    B. Ingress and egress restrictions shall be reinforced with appropriate signage and pavement markings within the Project site and in the public Right-of-Way, as appropriate. The prohibition of truck ingress at the easterly driveway shall be visible to drivers in the public Right-of-Way.

64. Left-turn ingress and/or egress at all access locations may be restricted in the future due to traffic operational or safety concerns. Alternatives to such restrictions may be considered, subject to approval of the City Engineer.

65. All gated ingress locations which do not provide adequate space within the Project site for the design vehicle to turn around shall be designed so that the gate position as either opened or closed is visible to drivers in the public Right-of-Way. At no time shall the design and gating of Project driveways require vehicles to reverse into a travel lane in the public Right-of-Way in order to depart or turn around. This requirement may be excluded if the gate is manned at all times with personnel who may permit an errant driver to enter the site in order to turn around and depart.

66. Stopping sight distance must be shown to meet the required standards both horizontally and vertically at all ingress/egress locations including consideration for walls, landscaping, grading, and vegetation. Sight distances shall comply with current AASHTO requirements.

67. The site plan shall identify the on-site vehicular traffic flow patterns and circulation, on-site signing and striping, and any restricted, reserved, or other pre-designated parking areas.

68. The location of bicycle parking shall be depicted on the site plan. The number of bicycle parking spaces shall be determined in compliance with the City of Fontana Zoning and Development Code. Bicycle parking shall comply with the Association of Pedestrian and Bicycle Professionals' (APBP) bicycle parking design guidance. In the event that the Fontana Zoning and Development Code and the APBP guidance differ, the Fontana Zoning and Development Code requirements shall prevail.

69. The site plan shall identify all pedestrian access ways and traffic crossings. Crossings shall be clearly marked, lighted, and identified throughout the interior of the project. Pedestrian walkways shall have sufficient pathway lighting.

70. The site plan shall identify the Americans With Disabilities Act (ADA) compliant path(s) of travel to/from the public right of way and from all ADA accessible parking spaces.

PRIOR TO ISSUANCE OF GRADING/CONSTRUCTION PERMITS

71. The Applicant shall provide a striping and signing plan for all roadway improvements, subject to the approval of the City Engineer as part of the approval of the street improvement plans.

PRIOR TO ISSUANCE OF ANY CERTIFICATE OF OCCUPANCY

72. The Applicant shall pay the applicable Development Impact Fees prior to the issuance of any occupancy permits at the established rate pursuant to Government Code Section 66007.

FIRE DEPARTMENT:

73. **Jurisdiction.** The above referenced project is under the jurisdiction of the Fontana fire Protection District (herein "Fire Department"). Prior to any construction occurring on any parcel, the applicant shall contact the Fire Department for verification of current fire protection requirements. All new construction shall comply with the current California Fire Code requirements and all applicable statutes, codes, ordinances, and standards of the Fire Department.

74. **Fire Access Road Width.** Prior to map recordation, all fire access roadways shall be designed to meet the requirements for this development and shall be approved by the Fire Department. All buildings shall have access provided by approved roads, alleys, and private drives with a minimum twenty-six (26) foot unobstructed width and vertically to fourteen (14) feet six (6) inches in height. Buildings three (3) stories in height or more shall have a minimum access of thirty (30) feet unobstructed width and vertically to fourteen (14) feet six (6) inches in height. California Fire Code Chapter 5 & SBCoFD Standard A-1.

75. **Turnaround**. An approved turnaround shall be provided at the end of each roadway one hundred and fifty (150) feet or more in length. Cul-de-sac length shall not exceed six hundred (600) feet; all roadways shall not exceed a 12 % grade and have a minimum of nineteen (19) foot inside radius and a forty-five (45) foot outside radius for all turns. California Fire Code Chapter 5 & SBCoFD Standard A-1.

76. **Street Signs.** Approved temporary or permanent street signs shall be installed throughout the project prior any combustible materials being placed on the construction site. California Fire Code Chapter 5 & SBCoFD Standard A-2.

77. **Fire Lanes**. The applicant shall submit a site plan to the Fire Department for review and approval of all proposed signage and striping for all fire access roadways. All curbs adjacent to fire lanes shall be painted red and "No Parking, Fire Lane" signs shall be installed on public and private roads in accordance with approved standards. SBCoFD Standard A-2.

78. **Water System Commercial**. Prior to map recordation or lot line adjustment, all water supply systems shall be designed to meet the required fire flow for this development and shall be approved by the Fire Department. The required fire flow shall be determined by using Appendix BB of the California Fire Code. A minimum of one new six (6) inch fire

hydrant assembly with two (2) two and one half (2 1/2) inch and one (1) four (4) inch outlet (4”x2.5”x2.5”) shall be provided. All fire hydrants shall be spaced no more than three hundred (300) feet apart as measured along vehicular travel-ways. California Fire Code Chapter 5 & SBCoFD Standard W-2.
The Fire Flow for this project shall be for Building-1: 2,125 GPM for a two-hour duration at 20 psi residual operating pressure. Fire Flow is based on a 41,996 Square Foot structure. The Fire Flow for this project shall be for Building-2: 1,875 GPM for a 1.5 hour duration at 20 psi residual operating pressure. Fire Flow is based on a 30,767 Square Foot structure.

79. **Hydrant Marking.** Blue reflective pavement markers indicating fire hydrant locations shall be installed as specified by the Fire Department. SBCoFD Standard W-2.

80. **Water System Certification.** The applicant shall provide the Fire Department with a letter from the serving water company, certifying that the required water improvements have been made or that the existing fire hydrants and water system will meet distance and fire flow requirements. Fire flow water supply shall be in place prior to placing combustible materials on the jobsite. California Fire Code Chapter 5.

81. **Combustible Protection.** Prior to combustibles being placed on the project site an approved paved roadway providing fire access and fire hydrants providing an acceptable fire flow shall be installed. California Fire Code Chapter 5.

82. **Fire Sprinkler-NFPA #13.** An automatic fire sprinkler system complying with NFPA 13 and Fire Department standards is required. A fire sprinkler contractor shall submit three (3) sets of detailed plans to the Fire Department for review and approval. The plans shall include hydraulic calculations and manufacturer specification sheets. The required fees shall be paid at the time of plan submittal. California Fire Code Chapter 9 & SBCoFD Standard F-1.

83. **Fire Alarm, Waterflow Monitoring**. A water flow monitoring fire alarm system complying with the California Fire Code, NFPA and all applicable codes is required for fire sprinkler systems with twenty (20) sprinkler heads or more. A fire alarm contractor shall submit three (3) sets of detailed plans to the Fire Department for review and approval. The required fees shall be paid at the time of plan submittal. California Fire Code Chapter 9, NFPA 72 & SBCoFD Standard F-5.

84. **Fire Extinguishers.** Hand portable fire extinguishers are required. The location, type, and cabinet design shall be approved by the Fire Department. California Fire Code Chapter 9.

85. **Commercial Addressing.** Commercial, industrial, and multi-family developments of 100,000 sq. ft or less shall have the street address installed on the building with numbers that are a minimum eight (8) inches in height and with a one (1) inch stroke. The street address shall be visible from the street. During the hours of darkness, the numbers shall be electrically illuminated (internal or external). Where the building is two hundred (200) feet or more from the roadway, additional non-illuminated contrasting six (6) inch numbers shall be displayed at the property access entrances. California Fire Code Chapter 5 & SBCoFD Standard B-1

86. **Key Box.** An approved Fire Department key box is required. The key box shall be provided with a tamper switch and shall be monitored by a Fire Department approved central monitoring service. California Fire Code Chapter 5 & SBCoFD Standard A-4

87. **Security Gates.** In commercial, industrial, and multi-family complexes, all swing gates shall have an approved fire department Knox Lock. Where an automatic electric security gate is used, an approved Fire Department override switch is required. California Fire Code Chapter 5 & SBCoFD Standard A-3

88. **Material Identification Placards**. The applicant shall install, in all locations deemed appropriate by the Fire Department, approved material identification placards on the outside of all buildings and/or storage tanks that store hazardous or flammable materials. Additional placards shall be required inside the buildings when chemicals are segregated into separate areas. California Fire Code Chapter 50 & NFPA 704.

89. **High-Piled Storage.** The applicant shall submit an application for a High-Piled Storage permit for storage of over 12' in height of Class I-IV commodities and/or over 6' in height of high hazard commodities. Three (3) sets of detailed plans and a commodity analysis report shall be submitted to the Fire Department for review and approval. The applicant shall submit to the Fire Department concurrently with any racking permits to the Building and Safety division. California Fire Code Chapter 32 & SBCoFD Standard S-1.

90. **Secondary Access**. The development shall have a minimum of two points of vehicular access during each phase of construction for fire and emergency access purposes and for evacuation routes. SBCoFD Standard A-1

END OF CONDITIONS OF APPROVAL

FONTANA
CALIFORNIA

NOTICE OF EXEMPTION

TO: ☒	Office of Land Use and Climate Innovation State Clearinghouse P. O. Box 3044, Room 113 Sacramento, CA 95812-3044	FROM: (Public Agency)	Name: Address: Telephone:	City of Fontana 8353 Sierra Ave, Fontana CA 92335 909-350-6656
☒	Clerk of the Board of Supervisors or County Clerk (Include County name) Address:			

1. Project Title:	**Master Case No. 18-000053; Tentative Parcel Map No. 18-000005 (TPM No. 19950), and Design Review No. 18-000010**
2. Project Applicant (include address, telephone number and email address):	**C. VanDerHoek Architects, Inc.** **Carl VanDerHoek** **(714) 308-7662** **cvanderhoekarch@gmail.com** **4109 E. Ferwood Avenue** **Orange, CA 92869**
3. Project Location – Identify street address and cross streets or attach a map showing project site (preferably a USGS 15' or 7 1/2' topographical map identified by quadrangle name):	**The project site is located north of Hilton Drive and east of** Redwood **Avenue (APN: 1110-151-03)**
4. (a) Project Location – City: Fontana	(b) Project Location – County: San Bernardino
5. Description of nature, purpose, and beneficiaries of Project:	**Request to split one parcel into two parcels and for site and architectural review to develop two industrial commerce center buildings totaling 71,985 square feet (Building No. 1 will have 41,218 square feet and Building No. 2 will have 30,767 square feet) and associated on-site and off-site improvements on a 3.98 acre site.**

6. Name of Public Agency approving project:	City of Fontana
7. Name of Person or Agency undertaking the project, including any person undertaking an activity that receives financial assistance from the Public	**C. VanDerHoek Architects, Inc.** **Carl VanDerHoek** **(714) 308-7662** **cvanderhoekarch@gmail.com** **4109 E. Ferwood Avenue** **Orange, CA 92869**
Agency as part of the activity or the person receiving a lease, permit, license, certificate, or other entitlement of use from the Public Agency as part of the activity:	
8. Exempt status: (check one)	
(a) ☐ Ministerial project.	(Pub. Resources Code § 21080(b)(1); State CEQA Guidelines § 15268)
(b) ☐ Not a project.	State CEQA Guidelines 15050(c)(2)-(3)
(c) ☐ Declared Emergency	(Pub. Resources Code § 21080(b)(3); State CEQA Guidelines § 15269(a))
(d) ☐ Emergency Project.	(Pub. Resources Code § 21080(b)(4); State CEQA Guidelines § 15269(b),(c))
(e) ☒ Categorical Exemption. State type and section number:	**Exempt under Section 15332, Class 32 (Infill Development) of the California Environmental Quality Act**
(f) ☐ Statutory Exemption. State Code section number:	
(g) ☐ Other. Explanation:	

9. Reason why project was exempt:	**The proposed Project is categorically exempt from CEQA pursuant to CEQA Guidelines Section No. 15332 (Class No. 32 – Infill Development). The project meets the CEQA requirements of Infill: (1) The Project is consistent with the Light Industrial (I-L) designation of the General Plan and the West End Specific Plan - BP-3 zoning district; (2) The Project Site is less than five (5) acres (3.98 acres); (3) The Project Site is not within any known sensitive or threatened habitat area; (4) The Project will not have any significant effects related to traffic, noise, air quality, or water quality; and (5) There are adequate public services for the development of the proposed industrial project. Further, none of the exceptions in CEQA Guidelines section 15300.2 apply to the Project.**
10. Lead Agency Contact Person: Telephone:	Salvador Quintanilla, Senior Planner 909-350-6656
11. If filed by applicant: Attach Certificate of Determination (Form "B") before filing.	
12. Was a public hearing held by the Lead Agency to consider the exemption? Yes ☒ No ☐ If yes, the date of the public hearing was: March 17, 2026	

Date: March 18, 2026

_____

Signature

Name: DiTanyon Johnson

Title: Planning Manager

☒ Signed by Lead Agency ☐ Signed by Applicant

Date Received for Filing:

(Clerk Stamp Here)

Authority cited: Sections 21083 and 21110, Public Resources Code.
Reference: Sections 21108, 21152, and 21152.1, Public Resources Code.

FONTANA
CALIFORNIA

NOTICE OF PUBLIC HEARING

SI DESEA INFORMACION EN ESPAÑOL REFERENTE A ESTA NOTIFICACION O PROYECTO, FAVOR DE COMUNICARSE AL (909) 350-6728.

In compliance with Section No. 202 of the Americans with Disabilities Act of 1990 (42 U.S.C. Section No. 12132) and the federal rules and regulations adopted in implementation thereof, the Agenda will be made available in appropriate alternative formats to persons with a disability. Should you need special assistance to participate in this meeting, please contact the Planning Department by calling (909) 350-6718. Notification 48 hours prior to the meeting will enable the city to make reasonable arrangements to ensure accessibility to this meeting.

A PUBLIC HEARING HAS BEEN SCHEDULED BEFORE THE PLANNING COMMISSION OF THE CITY OF FONTANA FOR THE FOLLOWING:

Master Case No (MCN). 18-000053, Tentative Parcel Map No. 18-000005 (TPM No. 19950) and Design Review (DRP) No. 18-000010

A request to subdivide one parcel into two parcels along with the site and architectural review for the development of two (2) industrial commerce center facilities totaling approximately 71,985 square feet and associated site improvements on approximately 3.98 acres.

Environmental Determination: This project is categorically exempt pursuant to Section 15332, Class 32 (In-fill Development) of the California Environmental Quality Act (CEQA), and Section 3.22 (Categorical Exemption) of the 2019 City of Fontana Local Guidelines for Implementing the California Environmental Quality Act.

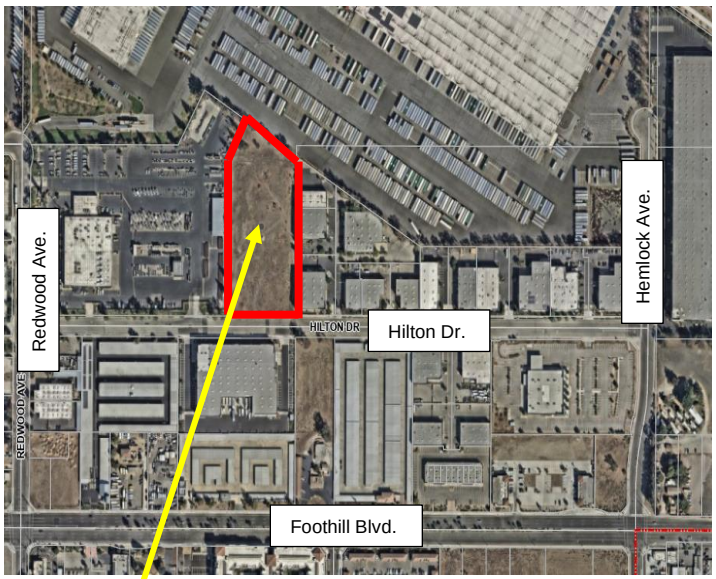

Project Site

Location of Property: North of Hilton Drive and west of Hemlock Avenue (APN: 1110-151 03)

Date of Hearing: March 17, 2026

Place of Hearing: Steelworkers Auditorium
8437 Sierra Avenue
Fontana, CA.

Time of Hearing: 6:00 PM

ATTACHMENT NO. 5

FONTANA
CALIFORNIA

Should you have any questions concerning this project, please contact **Salvador Quintanilla, Senior Planner**, at (909) 350-6656 or by e-mail at squintanilla@fontanaca.gov.

ANY INTERESTED PARTY MAY PROVIDE INFORMATION BY LETTER OR EMAIL WHICH MAY BE OF ASSISTANCE TO THE PLANNING COMMISSION. A COPY OF THE APPLICATION AND ENVIRONMENTAL DOCUMENTATION IS AVAILABLE FOR INSPECTION AT THE PLANNING DEPARTMENT, CITY HALL. PLEASE CONTACT THE PLANNER LISTED ABOVE.

IF YOU CHALLENGE ANY ACTION TAKEN CONCERNING THIS ITEM IN COURT, YOU MAY BE LIMITED TO RAISING ONLY THOSE ISSUES YOU OR SOMEONE ELSE RAISED AT THE PUBLIC HEARING DESCRIBED IN THIS NOTICE, OR IN WRITTEN CORRESPONDENCE PROVIDED TO THE CITY AT, OR PRIOR TO, THE PUBLIC HEARING.

Publish: March 6, 2026
S.B. Sun Newspaper